US010816292B2

(12) **United States Patent**
Chakraborty et al.

(10) **Patent No.: US 10,816,292 B2**
(45) **Date of Patent: Oct. 27, 2020**

(54) **SYSTEMS, METHODS, AND APPARATUSES FOR IMPLEMENTING VIDEO SHOOTING GUNS AND PERSONAL SAFETY MANAGEMENT APPLICATIONS**

(71) Applicant: **SENSLYTICS CORPORATION**, San Jose, CA (US)

(72) Inventors: **Rabindra Chakraborty**, Johns Creek, GA (US); **Jay Kalra**, San Jose, CA (US); **Anupam Awasthi**, San Jose, CA (US); **Amol Awasthi**, Dubai (AE)

(73) Assignee: **SENSLYTICS CORPORATION**, San Jose, CA (US)

(*) Notice: Subject to any disclaimer, the term of this patent is extended or adjusted under 35 U.S.C. 154(b) by 0 days.

(21) Appl. No.: **16/562,208**

(22) Filed: **Sep. 5, 2019**

(65) **Prior Publication Data**

US 2019/0390927 A1 Dec. 26, 2019

Related U.S. Application Data

(63) Continuation of application No. 15/160,213, filed on May 20, 2016, now Pat. No. 10,443,966.
(Continued)

(51) **Int. Cl.**
F41A 17/06 (2006.01)
H04N 7/18 (2006.01)
(Continued)

(52) **U.S. Cl.**
CPC ***F41A 17/063*** (2013.01); ***F41A 17/066*** (2013.01); ***F41C 9/02*** (2013.01);
(Continued)

(58) **Field of Classification Search**
CPC F41A 17/063
(Continued)

(56) **References Cited**

U.S. PATENT DOCUMENTS

9,488,437 B1 * 11/2016 Schnog F41J 5/10
2010/0284683 A1 * 11/2010 Fressola F41H 13/0025 396/429

(Continued)

OTHER PUBLICATIONS

Encyclopedia of Internet Technologies and Applications by: Periera, Manuela; Freire, Mario Marques. Hershey : IGI Clobal. 2008.

(Continued)

Primary Examiner — Eileen M Adams
Assistant Examiner — Daniel T Tekle
(74) *Attorney, Agent, or Firm* — Womble Bond Dickinson (US) LLP

(57) **ABSTRACT**

In accordance with disclosed embodiments, there are provided systems, methods, and apparatuses for implementing video shooting guns and personal safety management applications. An exemplary personal safety device may include, for example, a processor and a memory to execute instructions; a rechargeable battery to electrically power the personal safety device; a front facing video camera to capture video data of a scene anterior to a front face of the personal safety device; a rear facing video camera to capture video data of a scene posterior to a rear of the personal safety device; an audio capture device to capture audio data from an environment within which the personal safety device is to operate; a trigger to initiate recording of the front facing video camera, the rear facing video camera, and the audio capture device when triggered by an operator of the personal safety device; and a transceiver to transmit the recorded video data from the front and rear cameras and the captured audio data to a remote location over a network. According to another embodiment, a holster operates in conjunction with a body camera to activate audio and video capture and streaming upon removal of a firearm from the holster. Other related embodiments are disclosed.

20 Claims, 17 Drawing Sheets

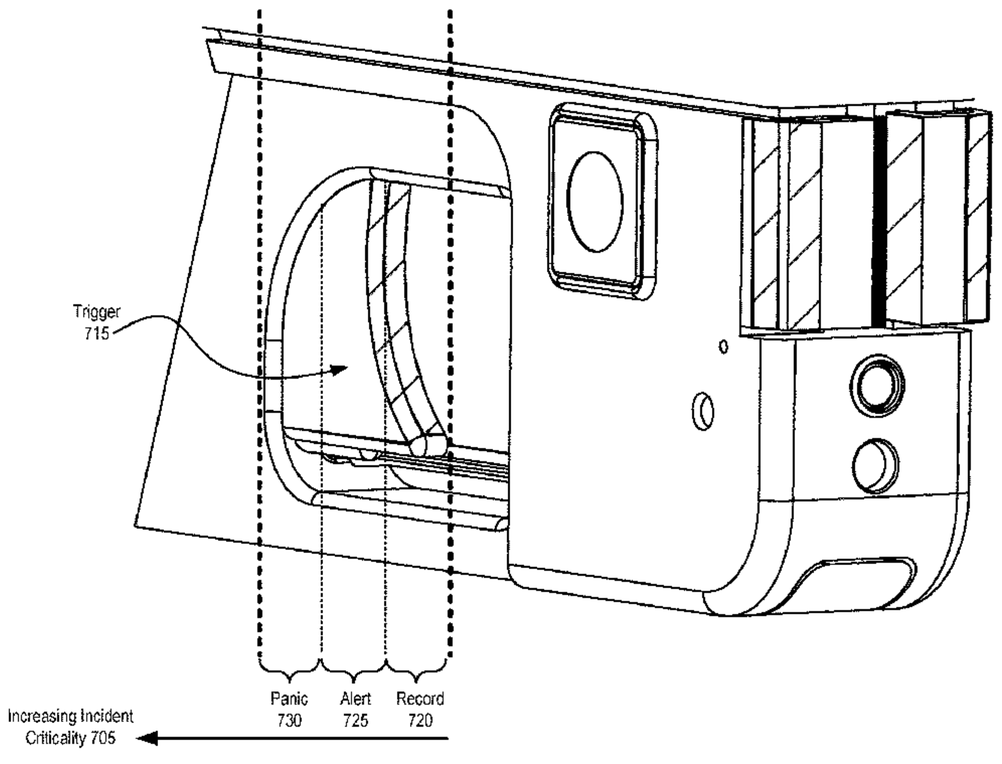

Related U.S. Application Data

(60) Provisional application No. 62/317,822, filed on Apr. 4, 2016.

(51) **Int. Cl.**

H04N 1/00	(2006.01)
H04N 5/232	(2006.01)
F41C 33/02	(2006.01)
G06Q 50/26	(2012.01)
H04W 4/80	(2018.01)
H04W 4/029	(2018.01)
H04N 5/77	(2006.01)
F41C 9/02	(2006.01)
H04N 5/247	(2006.01)
F41J 5/10	(2006.01)
H04W 4/33	(2018.01)

(52) **U.S. Cl.**

CPC ***F41C 33/029*** (2013.01); ***F41J 5/10*** (2013.01); ***G06Q 50/265*** (2013.01); ***H04N 1/00204*** (2013.01); ***H04N 5/232*** (2013.01); ***H04N 5/247*** (2013.01); ***H04N 5/77*** (2013.01); ***H04N 7/181*** (2013.01); ***H04N 7/188*** (2013.01); ***H04W 4/029*** (2018.02); ***H04W 4/33*** (2018.02); ***H04W 4/80*** (2018.02)

(58) **Field of Classification Search**

USPC 386/223

See application file for complete search history.

(56) **References Cited**

U.S. PATENT DOCUMENTS

2015/0085184	A1	3/2015	Vidal	
2015/0113851	A1*	4/2015	Bensayan	F41A 17/063 42/117
2016/0092501	A1	3/2016	Chakraborty et al.	

OTHER PUBLICATIONS

U.S. Appl. No. 14/735,975, filed Jun. 10, 2015.

* cited by examiner

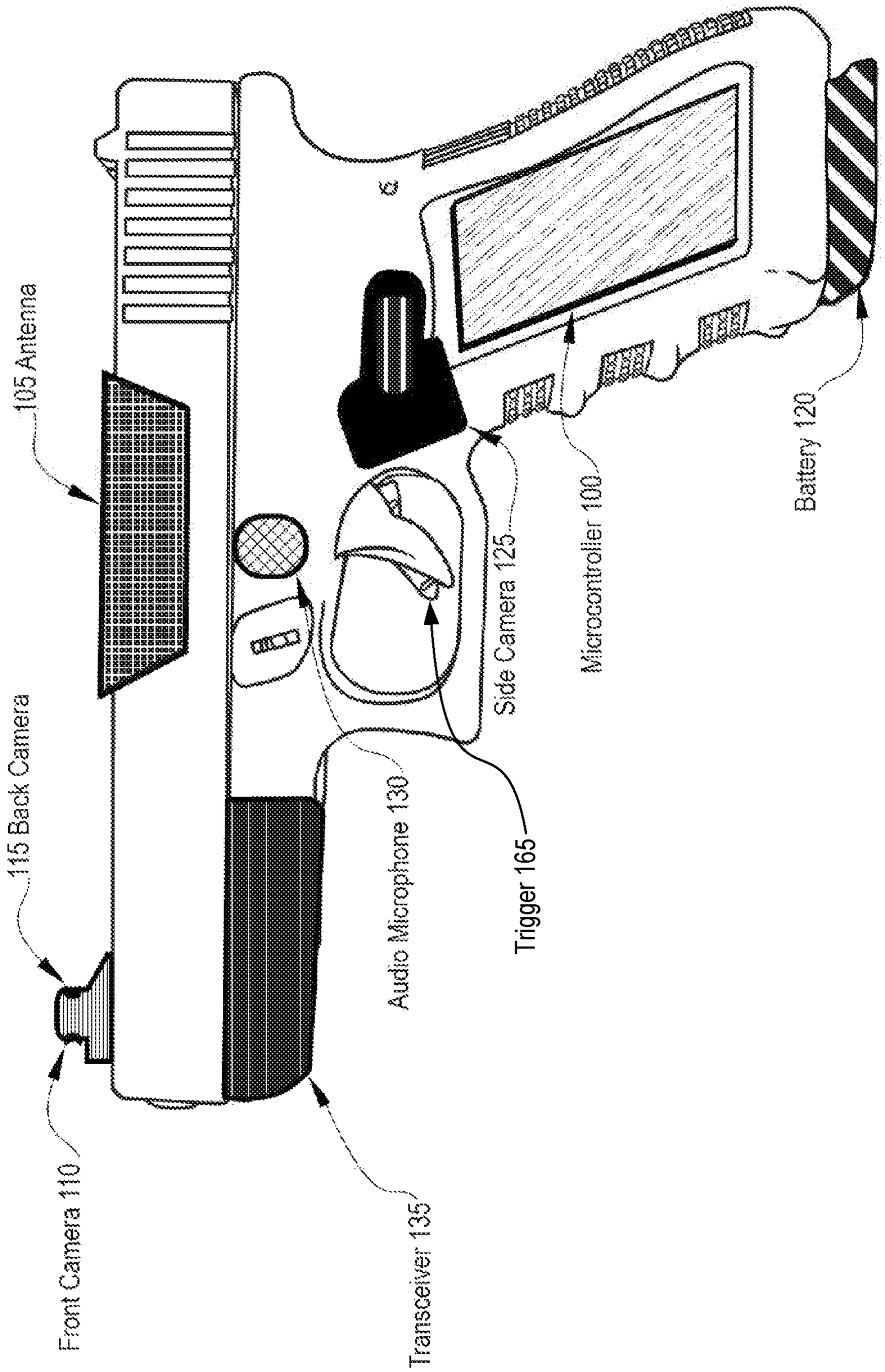
105 Antenna
115 Back Camera
Front Camera 110
Audio Microphone 130
Trigger 165
Side Camera 125
Microcontroller 100
Battery 120
Transceiver 135

FIG. 1

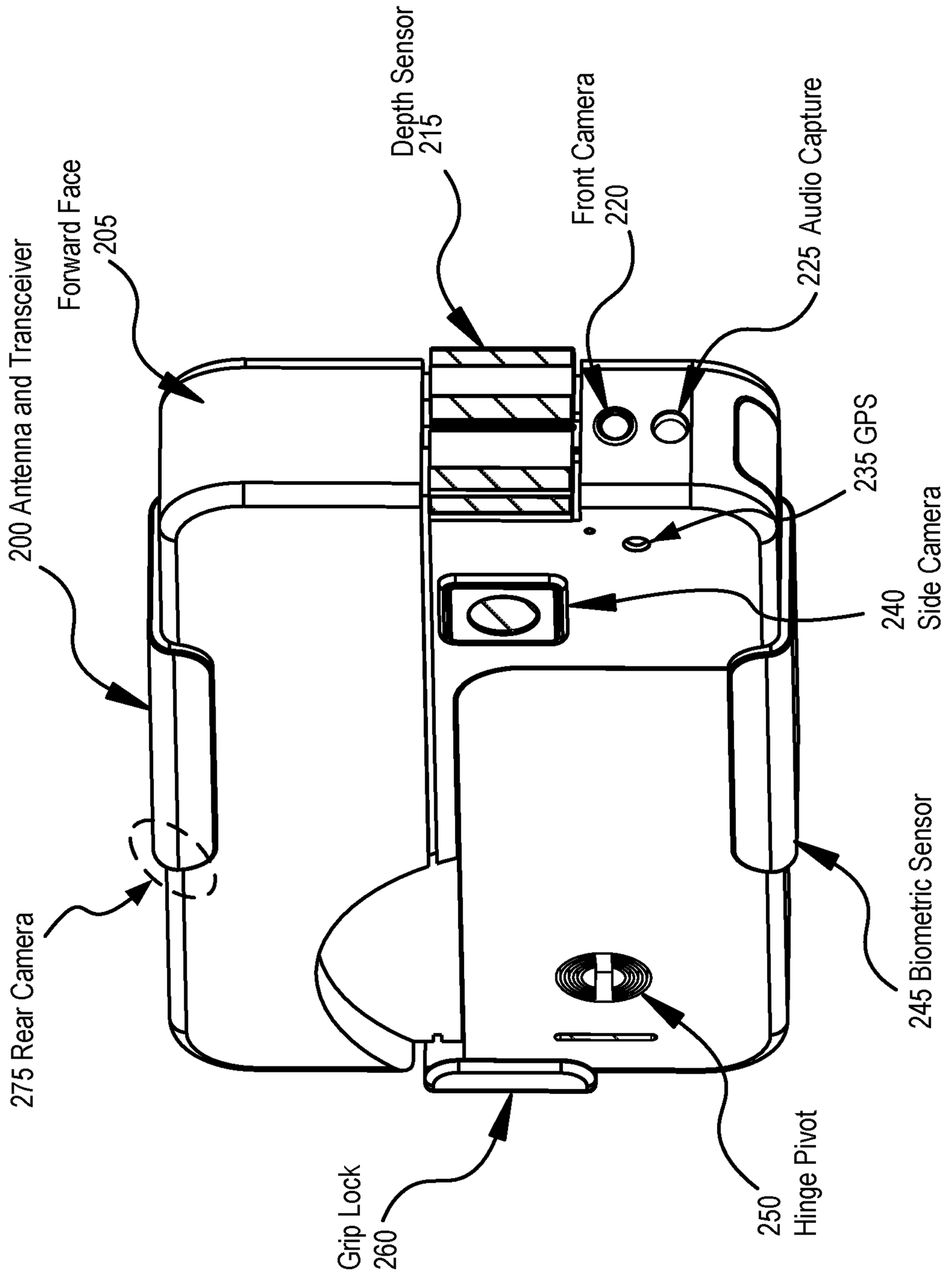
Depth Sensor
215
Front Camera
220
225 Audio Capture
Forward Face
205
200 Antenna and Transceiver
235 GPS
240
Side Camera
275 Rear Camera
245 Biometric Sensor
Grip Lock
260
250
Hinge Pivot

FIG. 2A

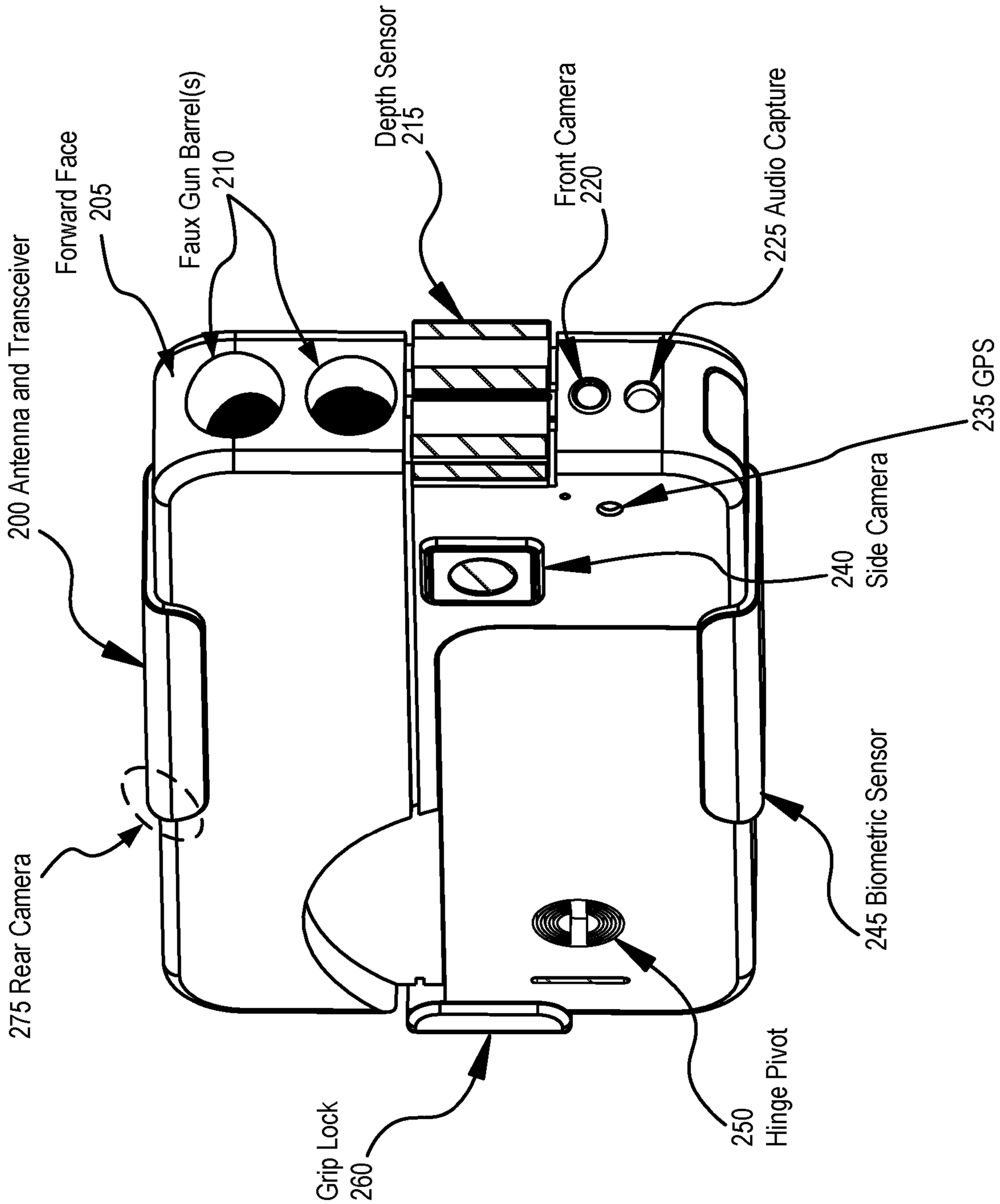
200 Antenna and Transceiver
Forward Face
205
Faux Gun Barrel(s)
210
Depth Sensor
215
Front Camera
220
225 Audio Capture
235 GPS
240
Side Camera
245 Biometric Sensor
250
Hinge Pivot
275 Rear Camera
Grip Lock
260

FIG. 2B

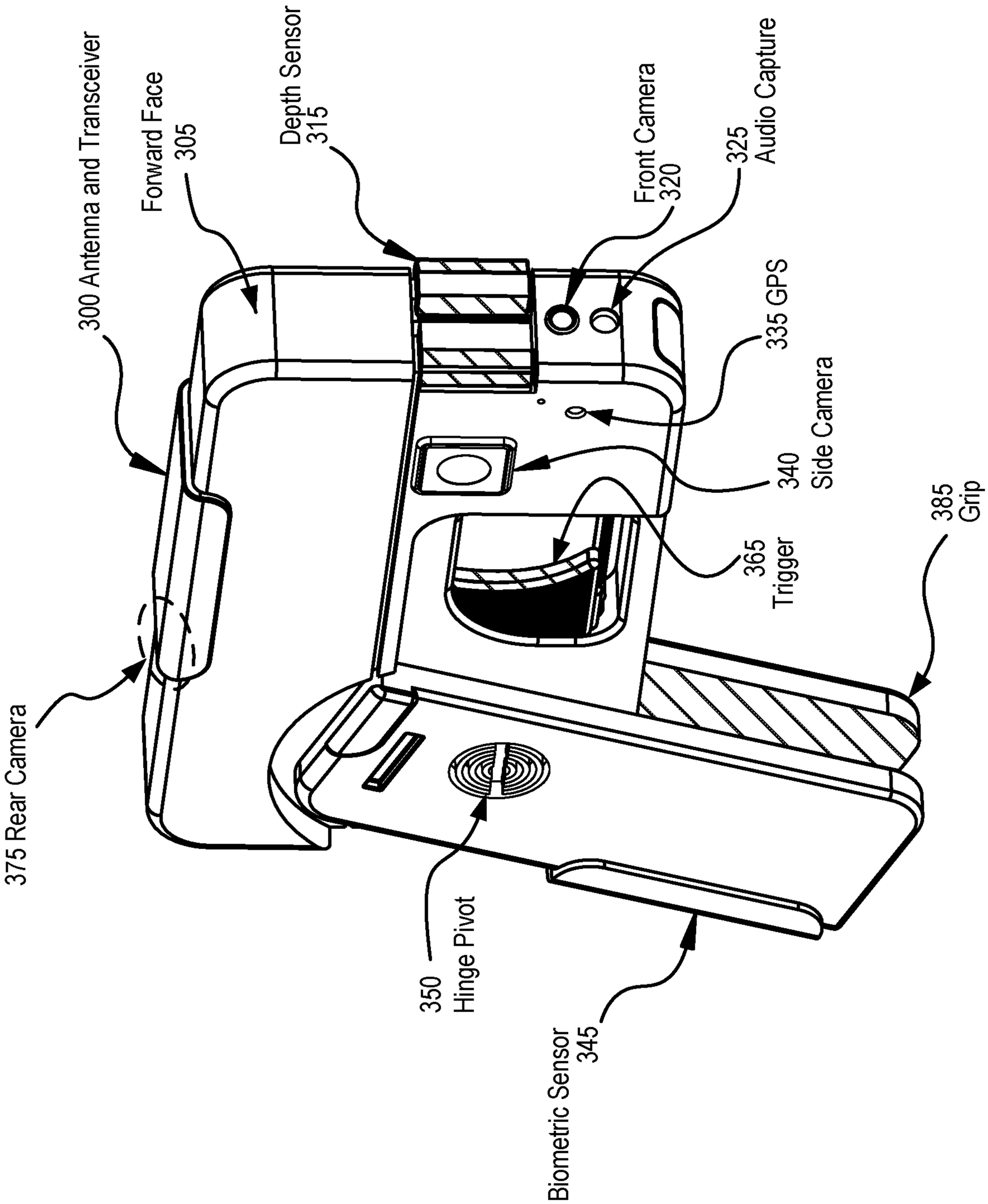
300 Antenna and Transceiver
Forward Face
305
Depth Sensor
315
Front Camera
320
325
Audio Capture
335 GPS
Camera
340
Side Ca
365
Trigger
385
Grip
375 Rear Camera
350
Hinge Pivot
Biometric Sensor
345

FIG. 3A

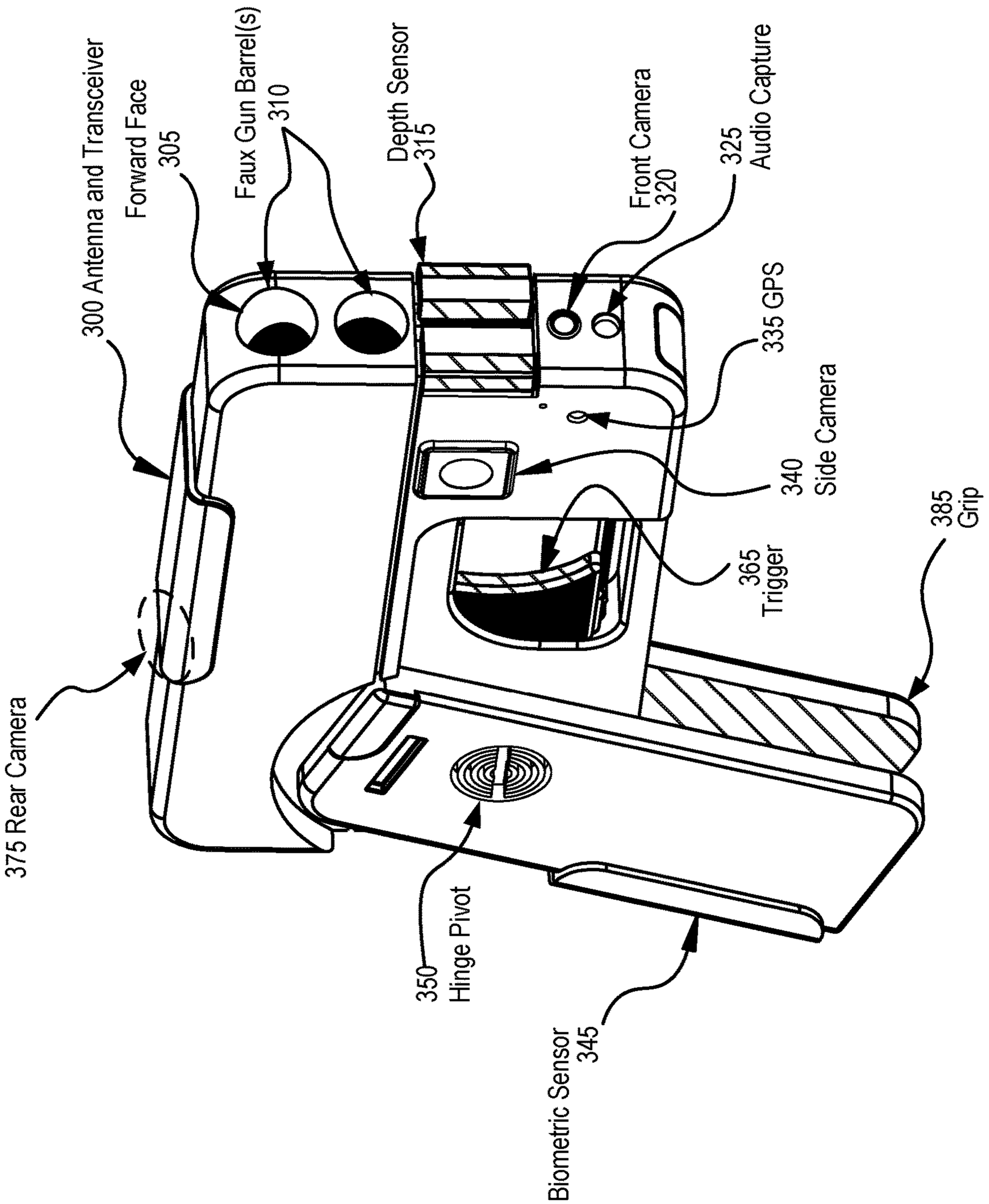
300 Antenna and Transceiver
Forward Face
305
Faux Gun Barrel(s)
310
Depth Sensor
315
Front Camera
320
325
Audio Capture
335 GPS
340
Side Camera
365
Trigger
385
Grip
375 Rear Camera
350
Hinge Pivot
Biometric Sensor
345

FIG. 3B

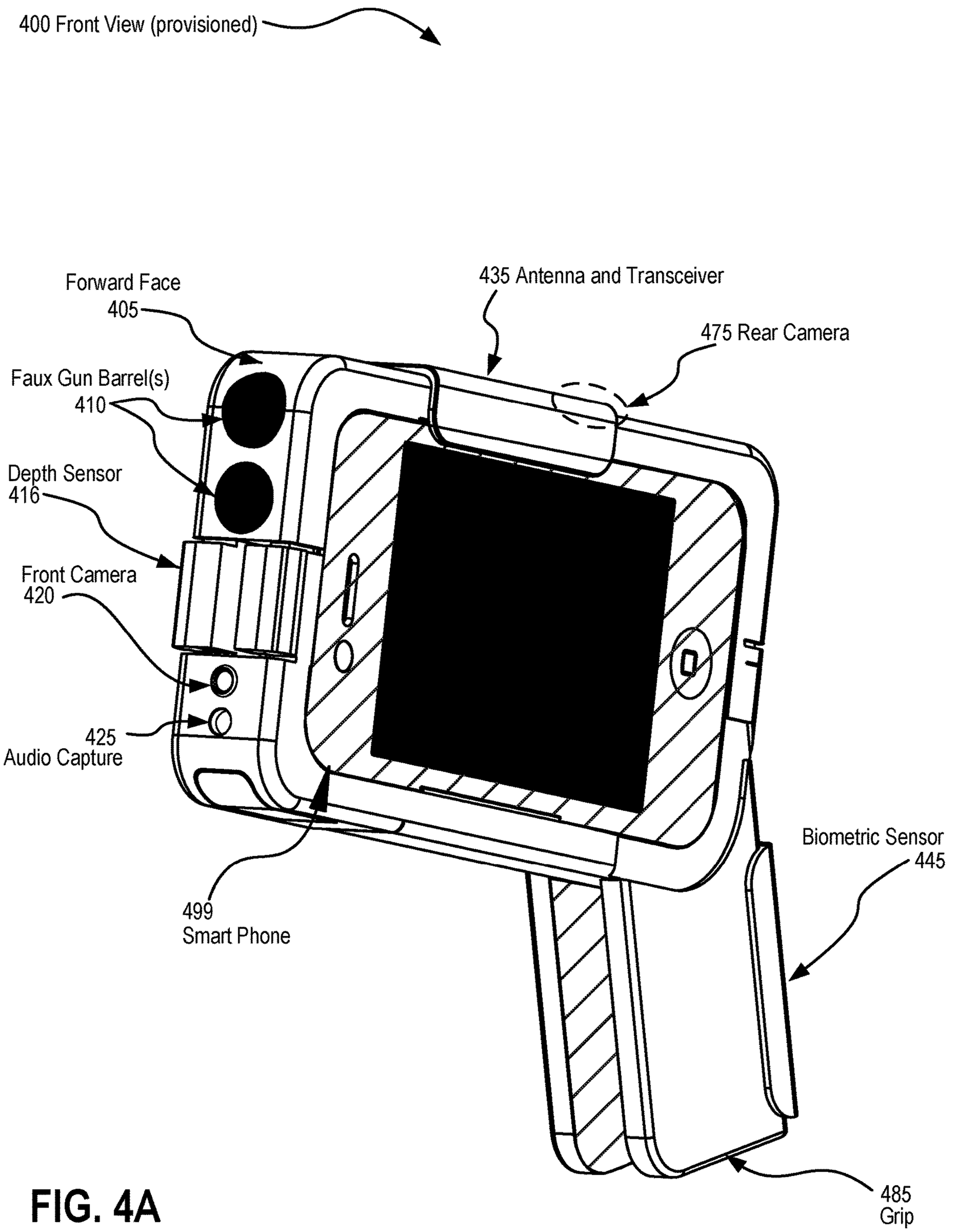
400 Front View (provisioned)
Forward Face
405
435 Antenna and Transceiver
475 Rear Camera
Faux Gun Barrel(s)
410
Depth Sensor
416
Front Camera
420
425
Audio Capture
499
Smart Phone
Biometric Sensor
445
485
Grip

FIG. 4A

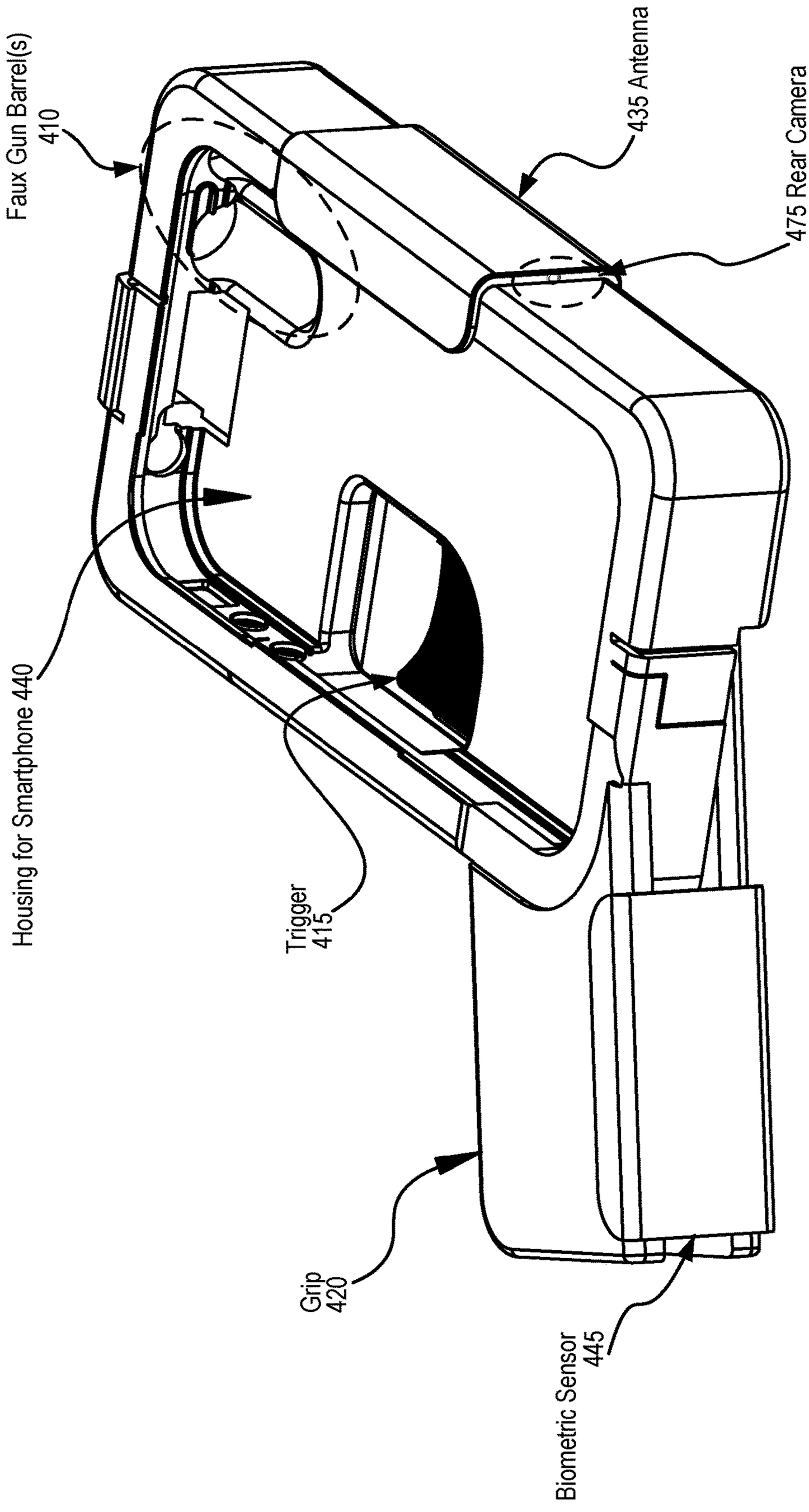
Faux Gun Barrel(s)
410
435 Antenna
475 Rear Camera
Housing for Smartphone 440
Trigger
415
Grip
420
Biometric Sensor
445
401 Front View (empty)

FIG. 4B

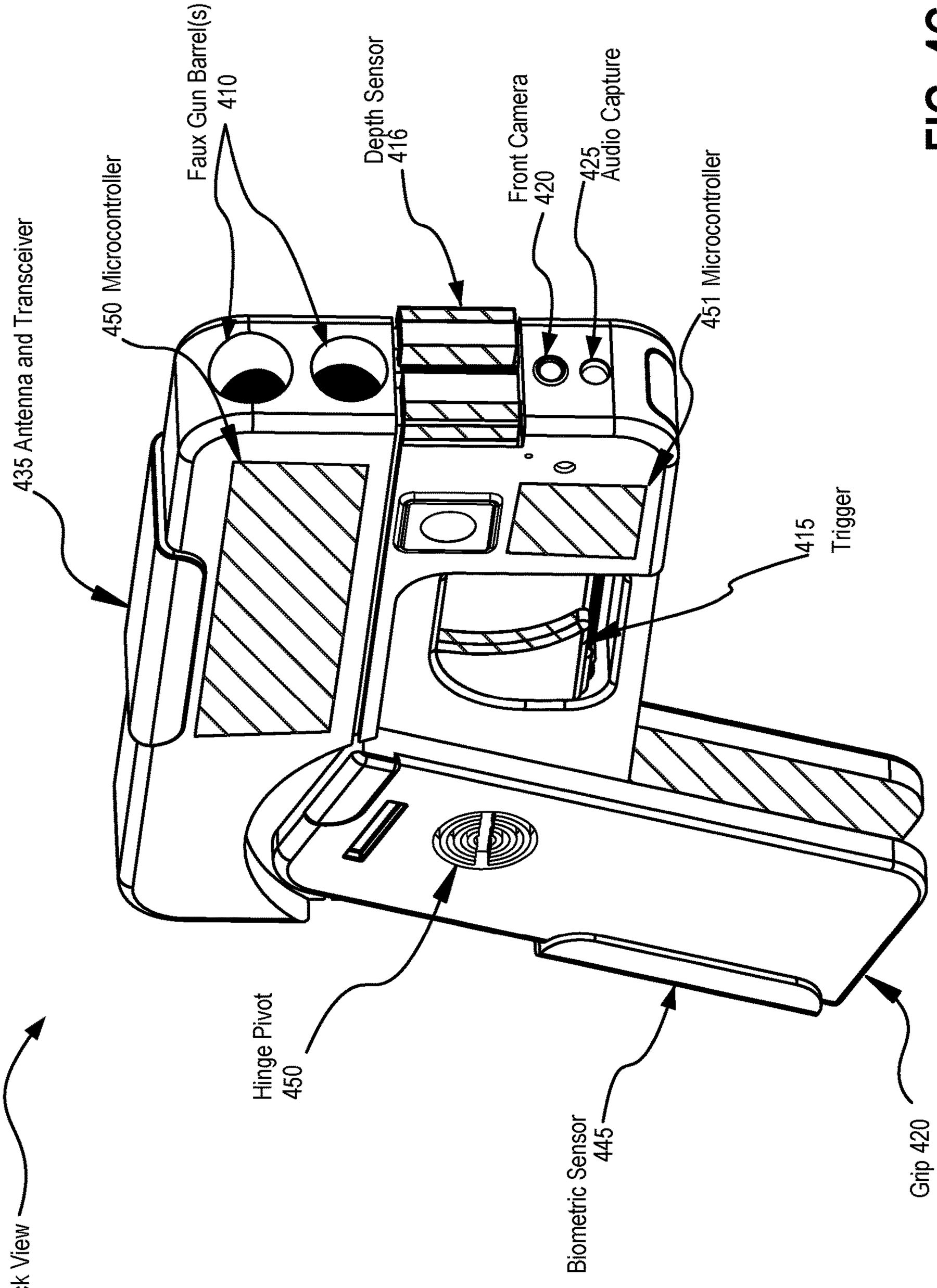
402 Back View
435 Antenna and Transceiver
450 Microcontroller
Faux Gun Barrel(s)
410
Depth Sensor
416
Front Camera
420
425
Audio Capture
451 Microcontroller
415
Trigger
Hinge Pivot
450
Biometric Sensor
445
Grip 420

FIG. 4C

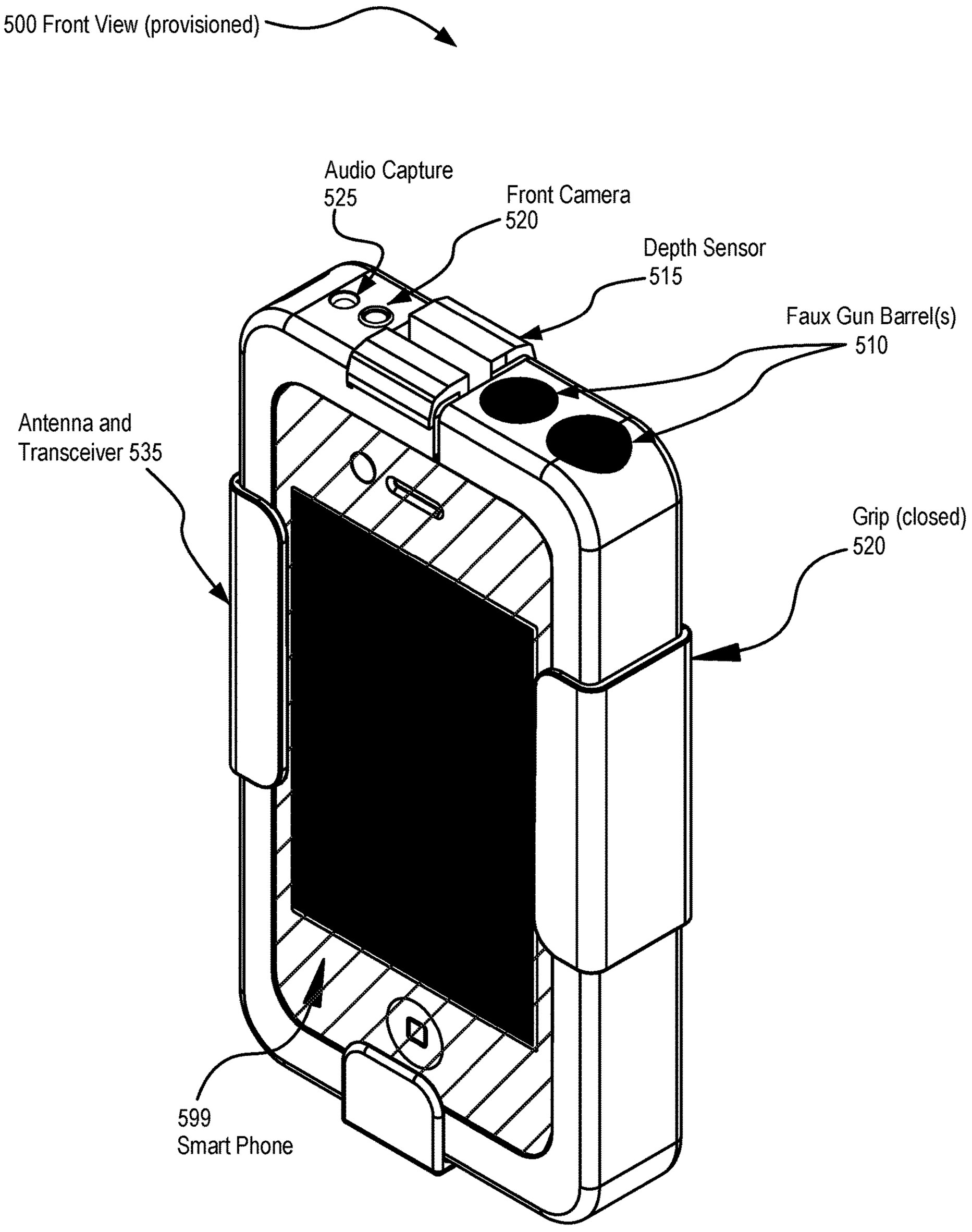
500 Front View (provisioned)
Audio Capture 525
Front Camera 520
Depth Sensor 515
Faux Gun Barrel(s) 510
Antenna and Transceiver 535
Grip (closed) 520
599 Smart Phone

FIG. 5A

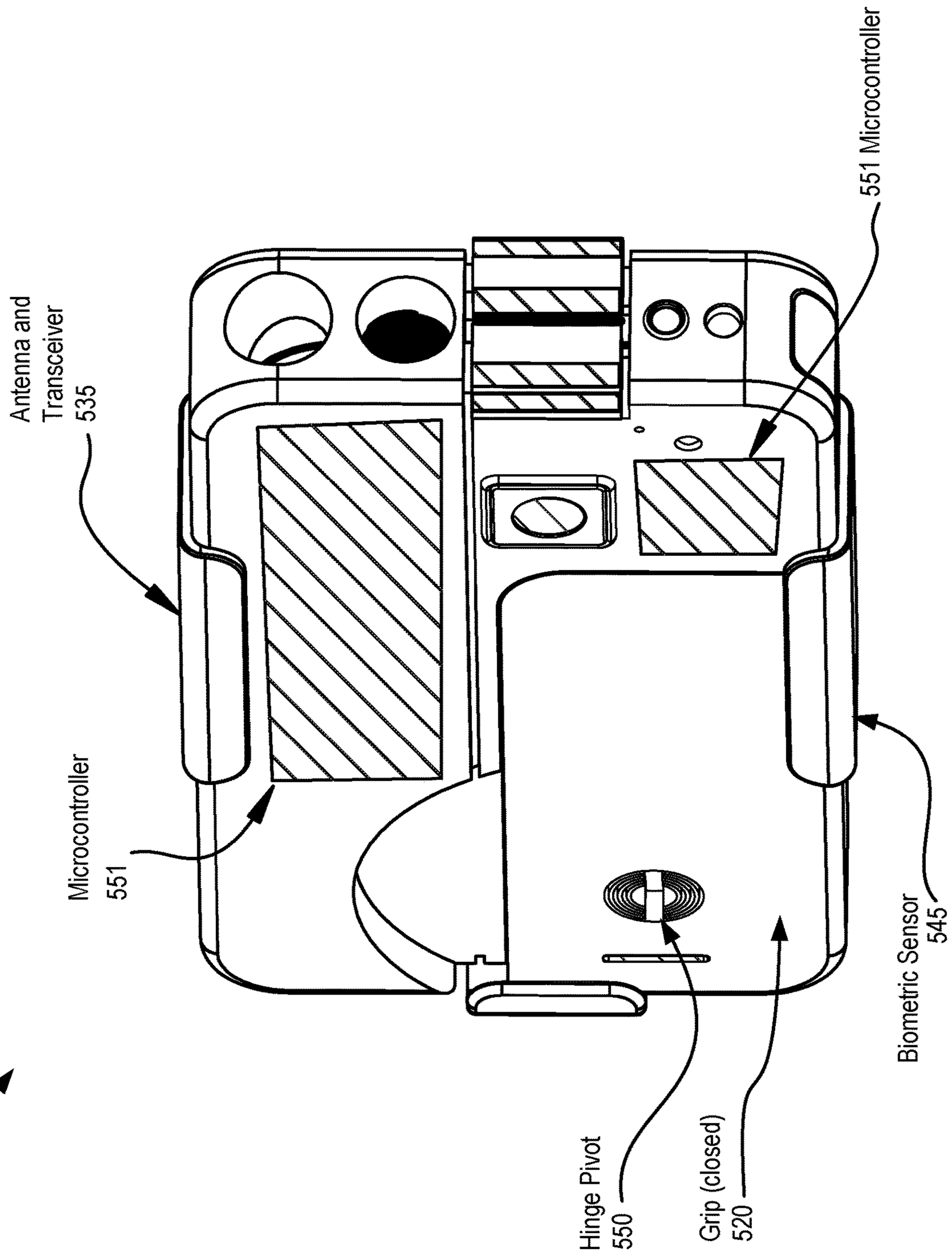
551 Microcontroller
Antenna and Transceiver 535
Microcontroller 551
Biometric Sensor 545
Hinge Pivot 550
Grip (closed) 520
501 Back View

FIG. 5B

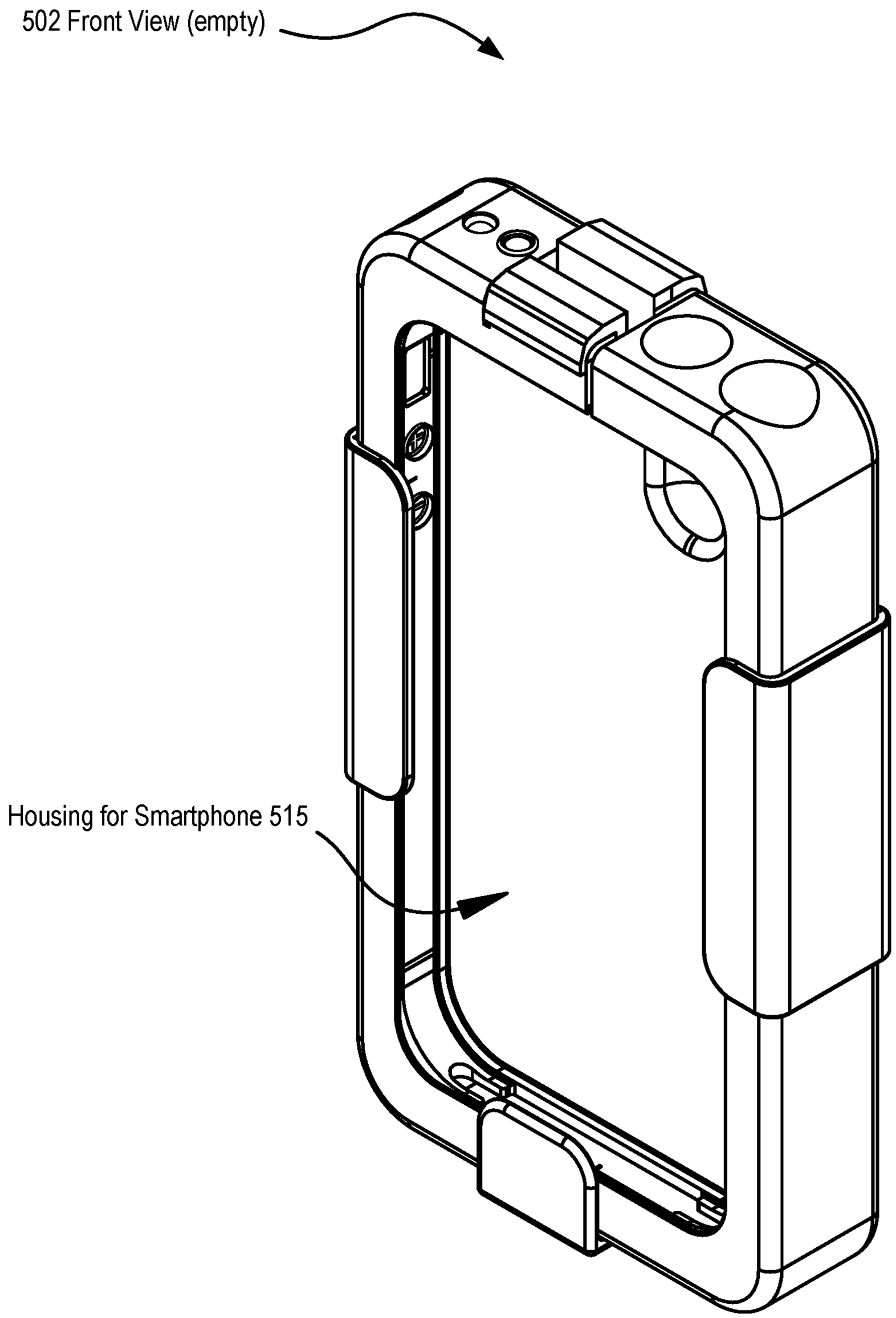

FIG. 5C

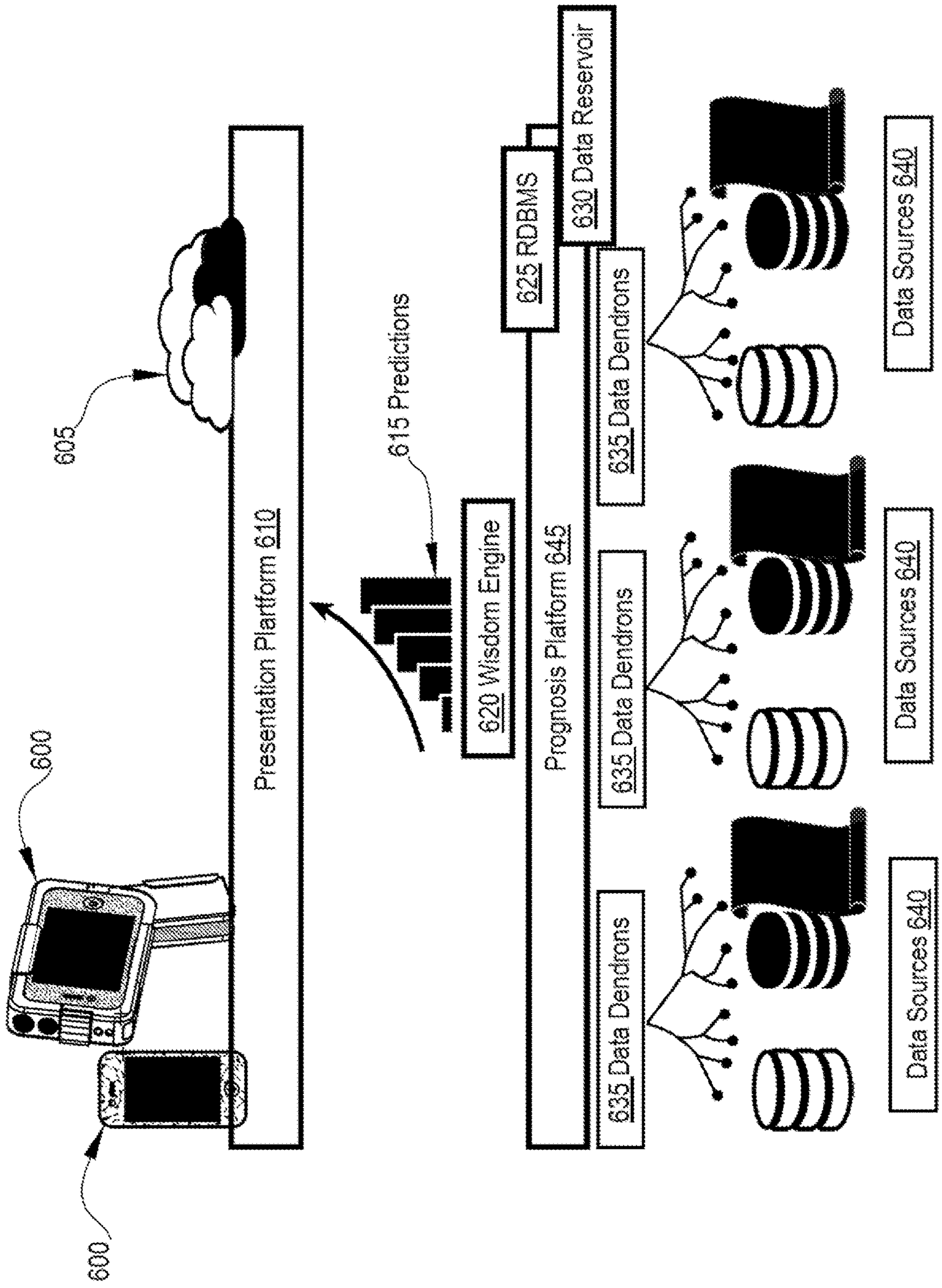
600
605
Presentation Platform 610
615 Predictions
620 Wisdom Engine
Prognosis Platform 645
625 RDBMS
630 Data Reservoir
635 Data Dendrons
635 Data Dendrons
635 Data Dendrons
Data Sources 640
Data Sources 640
Data Sources 640
600

FIG. 6

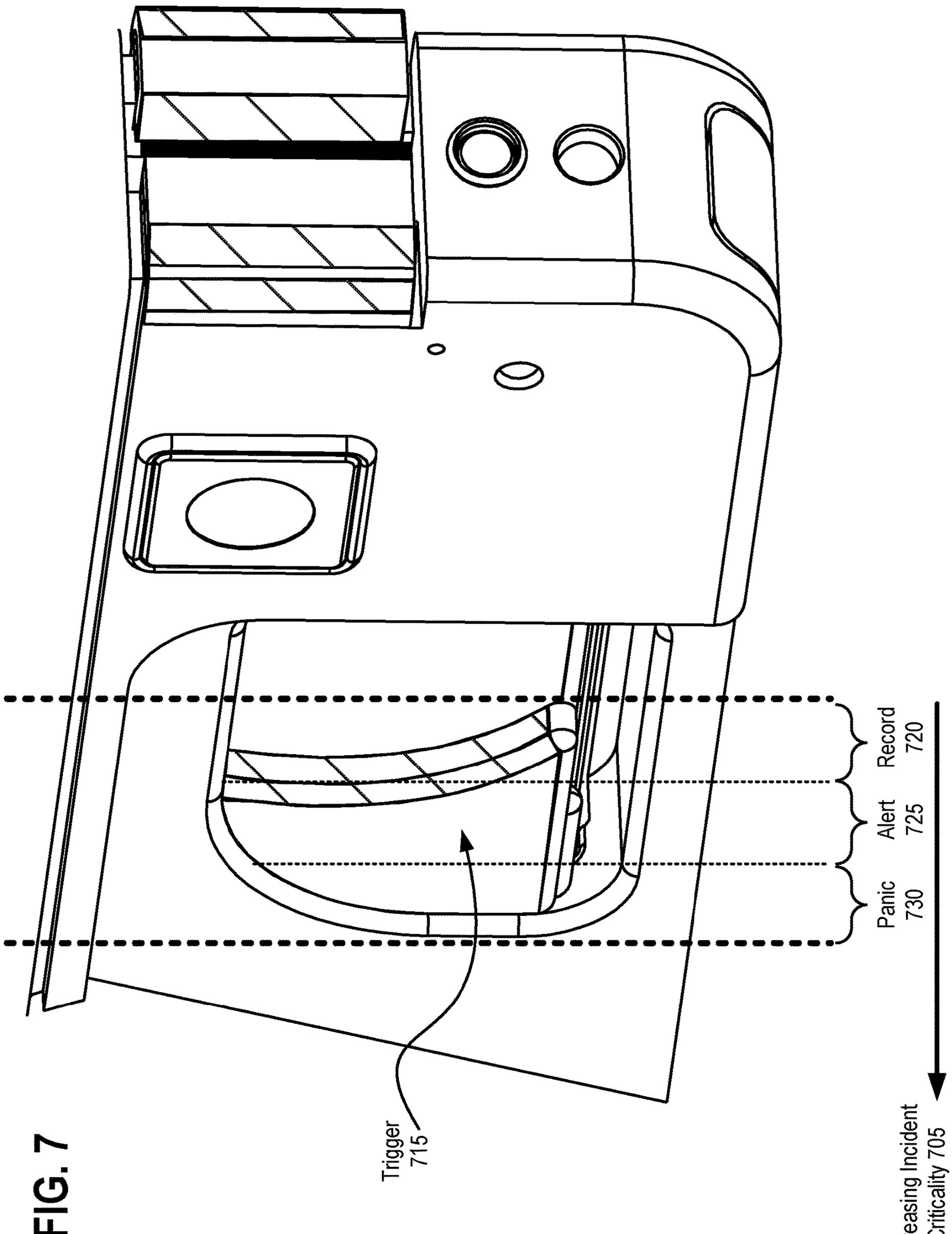
Record
720
Alert
725
Panic
730
Trigger
715
Increasing Incident
Criticality 705

FIG. 7

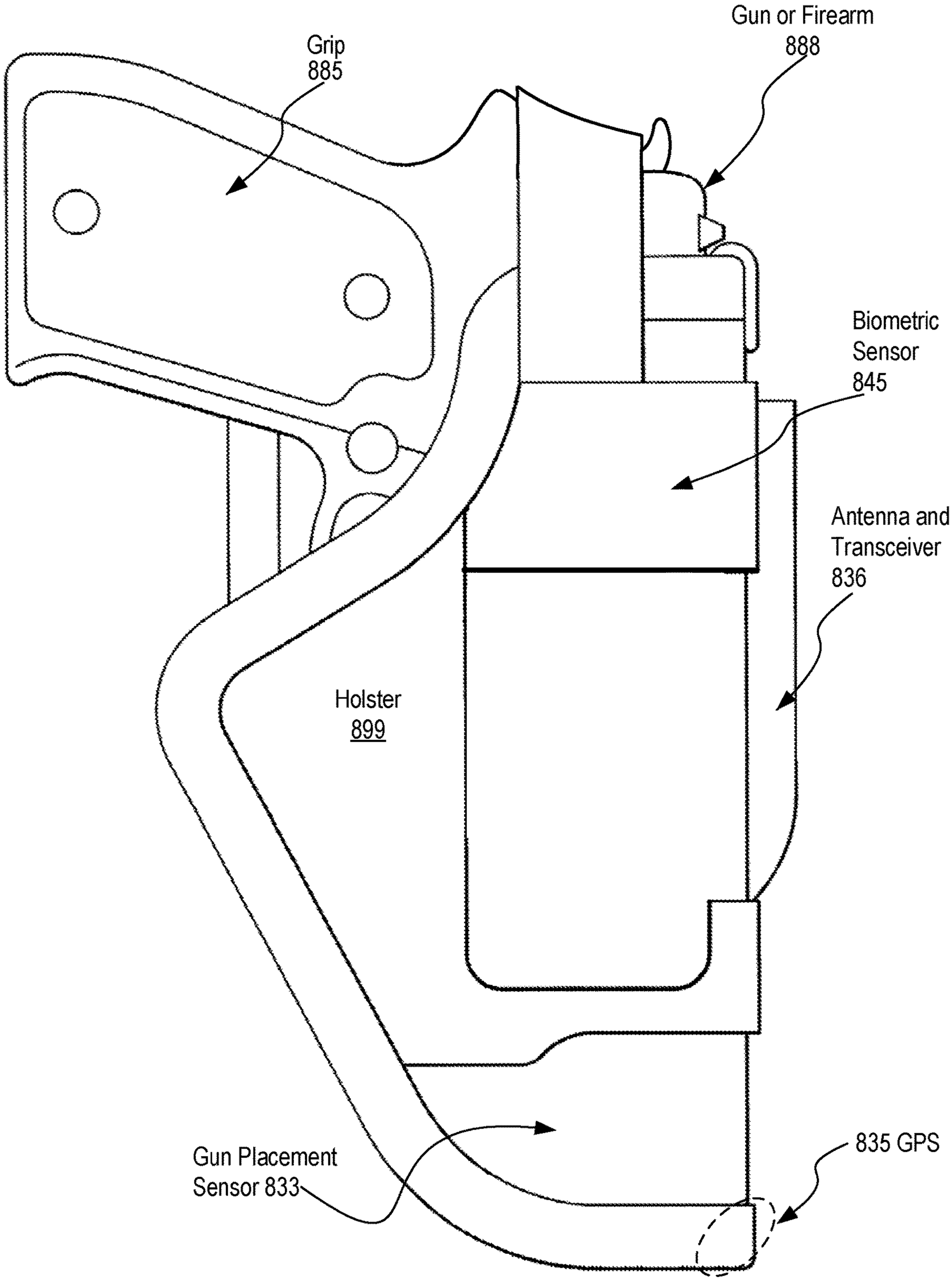
Grip
885
Gun or Firearm
888
Biometric
Sensor
845
Antenna and
Transceiver
836
Holster
899
Gun Placement
Sensor 833
835 GPS

FIG. 8

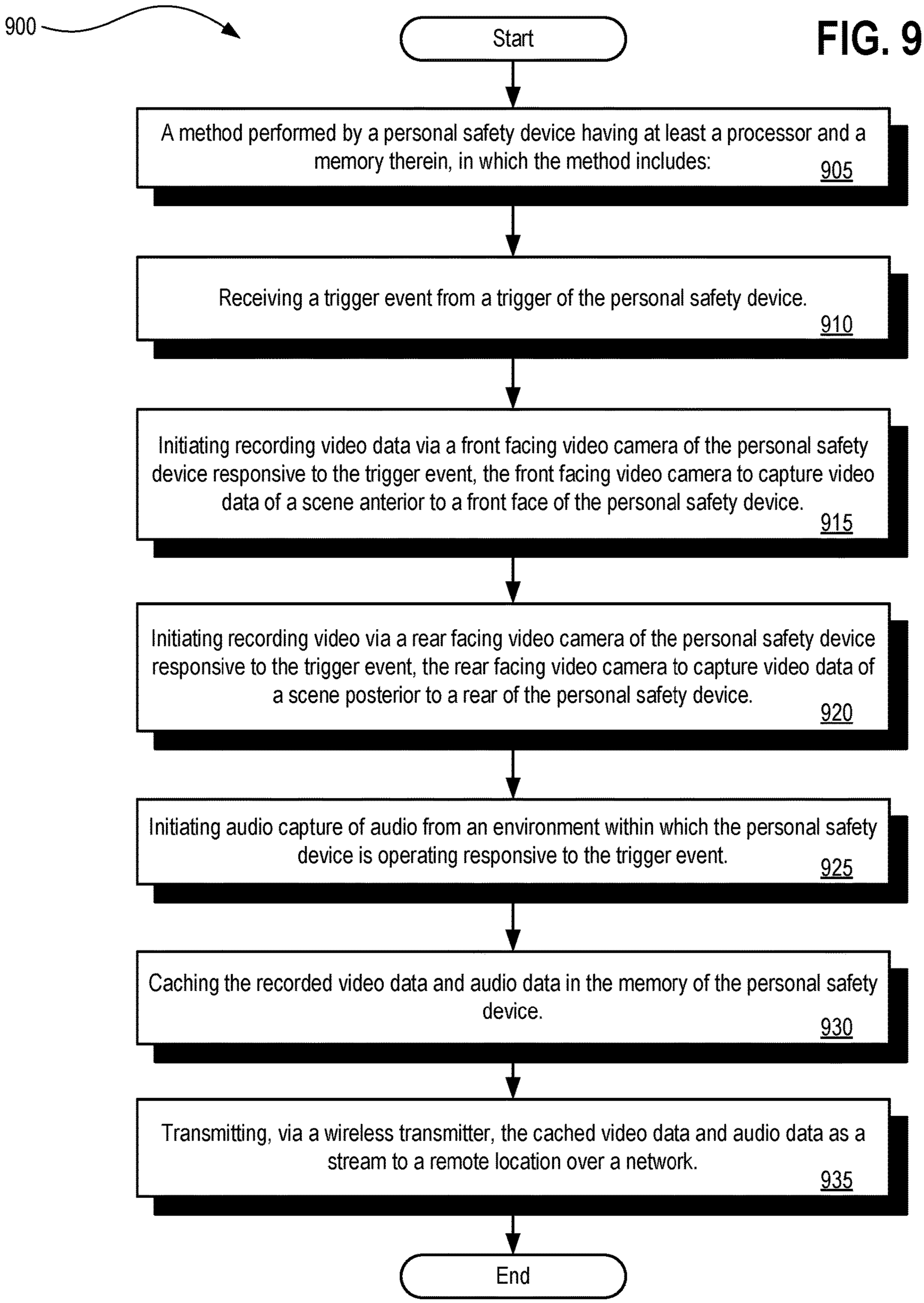
900
Start
A method performed by a personal safety device having at least a processor and a memory therein, in which the method includes:
905
Receiving a trigger event from a trigger of the personal safety device.
910
Initiating recording video data via a front facing video camera of the personal safety device responsive to the trigger event, the front facing video camera to capture video data of a scene anterior to a front face of the personal safety device.
915
Initiating recording video via a rear facing video camera of the personal safety device responsive to the trigger event, the rear facing video camera to capture video data of a scene posterior to a rear of the personal safety device.
920
Initiating audio capture of audio from an environment within which the personal safety device is operating responsive to the trigger event.
925
Caching the recorded video data and audio data in the memory of the personal safety device.
930
Transmitting, via a wireless transmitter, the cached video data and audio data as a stream to a remote location over a network.
935
End

FIG. 9

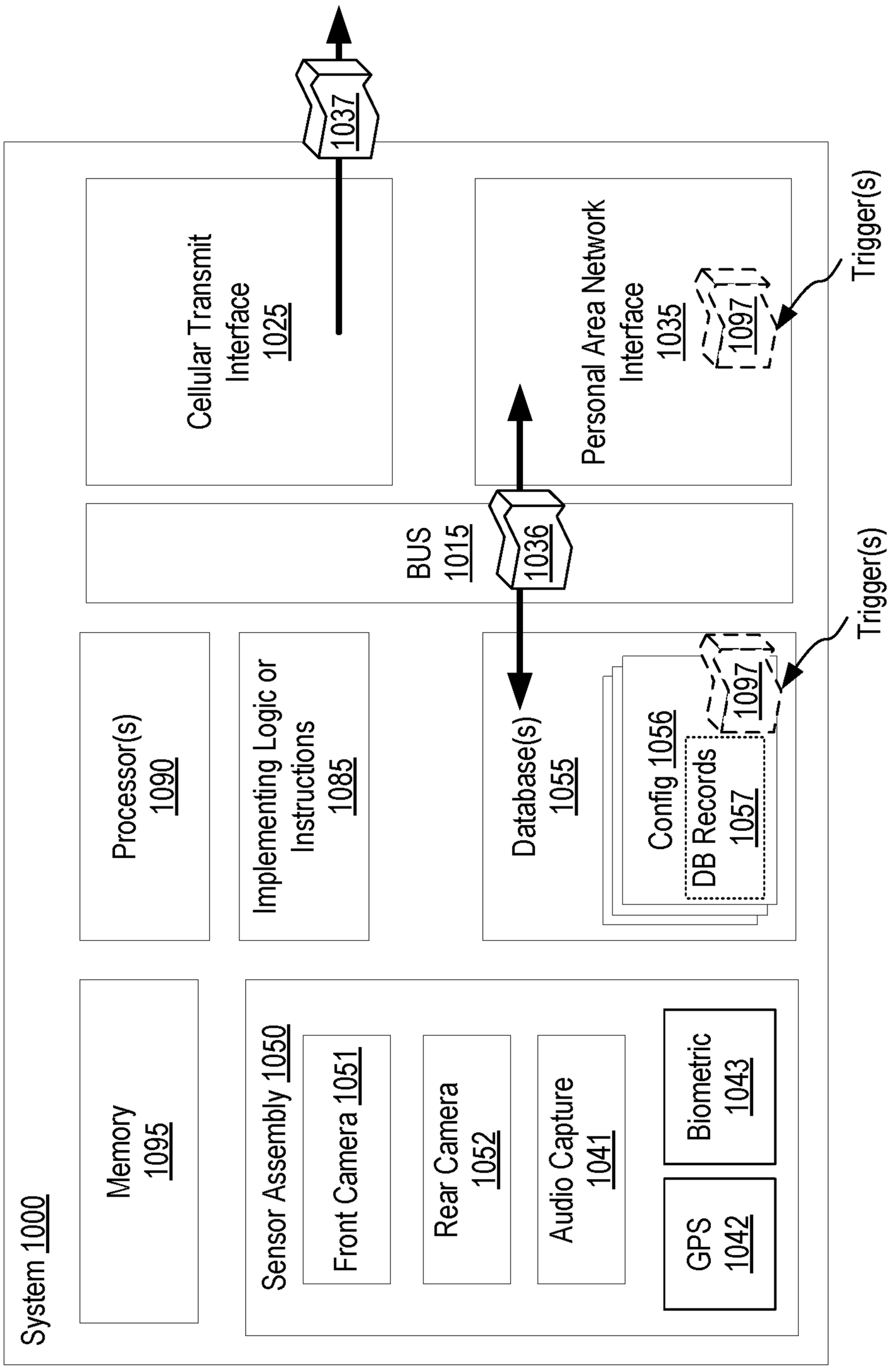
System 1000
Memory 1095
Sensor Assembly 1050
Front Camera 1051
Rear Camera 1052
Audio Capture 1041
GPS 1042
Biometric 1043
Processor(s) 1090
Implementing Logic or Instructions 1085
Database(s) 1055
Config 1056
DB Records 1057
1097
Trigger(s)
BUS 1015
1036
Cellular Transmit Interface 1025
Personal Area Network Interface 1035
1037

FIG. 10

FIG. 11

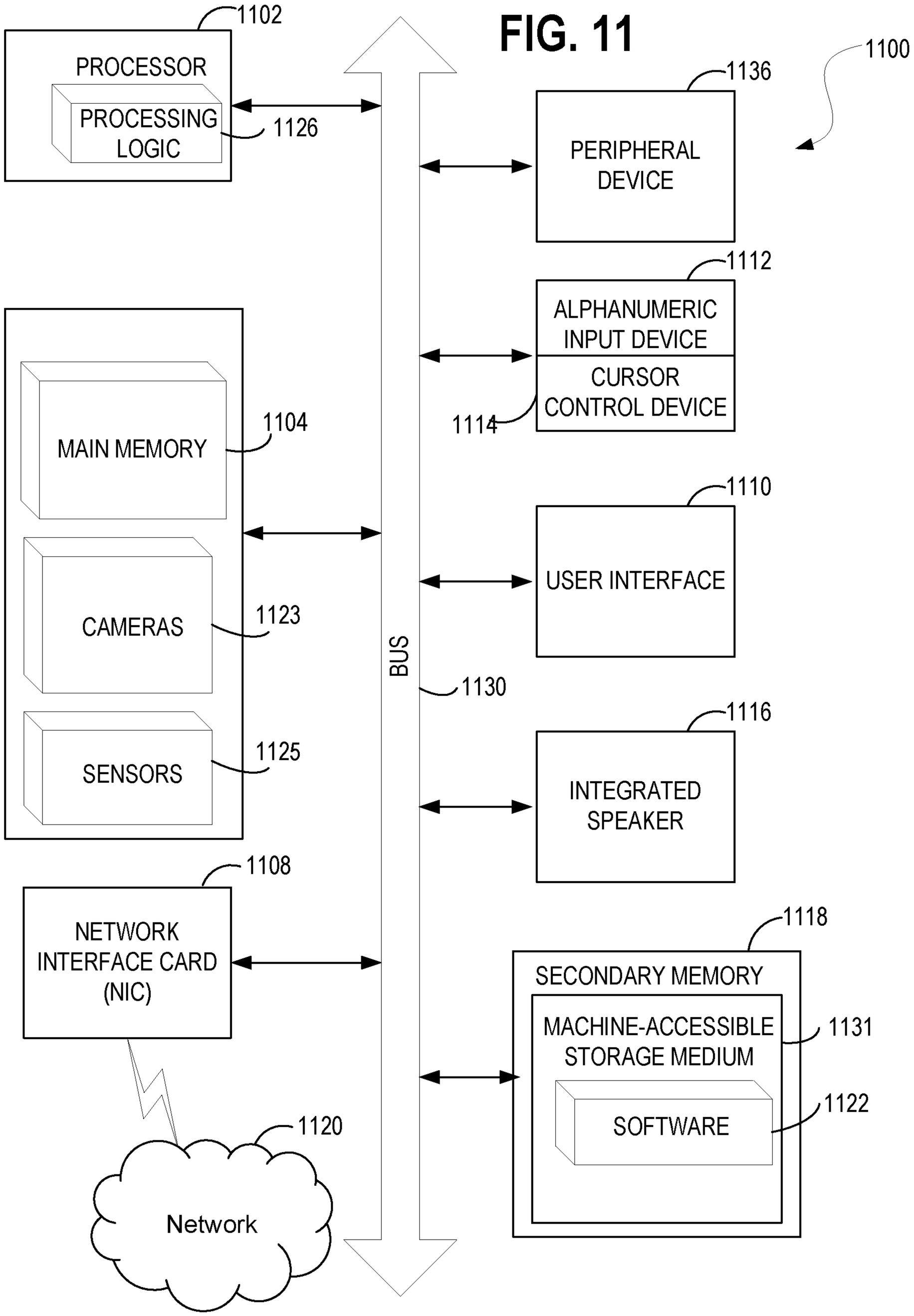
1102
PROCESSOR
PROCESSING LOGIC
1126
1100
1136
PERIPHERAL DEVICE
1112
ALPHANUMERIC INPUT DEVICE
CURSOR CONTROL DEVICE
1114
1110
USER INTERFACE
1104
MAIN MEMORY
1123
CAMERAS
1125
SENSORS
BUS
1130
1116
INTEGRATED SPEAKER
1108
NETWORK INTERFACE CARD (NIC)
1118
SECONDARY MEMORY
MACHINE-ACCESSIBLE STORAGE MEDIUM
1131
SOFTWARE
1122
1120
Network

SYSTEMS, METHODS, AND APPARATUSES FOR IMPLEMENTING VIDEO SHOOTING GUNS AND PERSONAL SAFETY MANAGEMENT APPLICATIONS

CLAIM OF PRIORITY

The present application is a continuation of and claims benefit of U.S. patent application Ser. No. 15/160,213, filed on May 20, 2016 and entitled "SYSTEMS, METHODS, AND APPARATUSES FOR IMPLEMENTING VIDEO SHOOTING GUNS AND PERSONAL SAFETY MANAGEMENT APPLICATIONS," which is related to and claims priority to the U.S. Provisional application entitled "VIDEO SHOOTING GUNS USING PERSONAL SAFETY MANAGEMENT APPLICATIONS," filed on Apr. 4, 2016, having a U.S. Provisional patent application No. of 62/317,822, the entire contents of which are incorporated herein by reference.

COPYRIGHT NOTICE

A portion of the disclosure of this patent document contains material which is subject to copyright protection. The copyright owner has no objection to the facsimile reproduction by anyone of the patent document or the patent disclosure, as it appears in the Patent and Trademark Office patent file or records, but otherwise reserves all copyright rights whatsoever.

TECHNICAL FIELD

Embodiments of the invention relate generally to the field of computing, and more particularly, to systems, methods, and apparatuses for implementing video shooting guns and personal safety management applications. Other embodiments relate to holsters operable in conjunction with body cameras to activate audio and video capture and streaming upon removal of a firearm from such a holster.

BACKGROUND

The subject matter discussed in the background section should not be assumed to be prior art merely as a result of its mention in the background section. Similarly, a problem mentioned in the background section or associated with the subject matter of the background section should not be assumed to have been previously recognized in the prior art. The subject matter in the background section merely represents different approaches, which in and of themselves may also correspond to embodiments of the claimed inventions.

There is a presently a national conversation with regard to guns, gun availability, gun safeguards, gun violence prevention, personal freedoms and the right of individuals to purchase and carry guns, and a variety of ancillary discussions. Politicians and citizens occupy a wide array of opinions and positions on these complex issues and some individuals experience personal conflict as they consider themselves to personally dislike guns and gun ownership, yet nevertheless have a legitimate interest in their own personal safety.

Regardless of the current political climate and the personal opinion of any one individual, there is a universal desire by all individuals to remain safe which often leads persons to invest in a wide array of personal safety means ranging from whistles to mace to Taser™ devices and ultimately to personally owned and carried firearms or "guns."

There exists a segment of the population which desires to maximize their personal safety but is unwilling to carry a firearm. Moreover, some industry experts opine that it is not the carrying of a firearm which actually keeps one safe, but rather, it is the perceived sense of self protection and the perceived sense of personal safety and ultimately empowerment which is attained by carrying the firearm, rather than actually discharging or firing the firearm.

Those individuals seeking such a sense self protection and presumed personal safety offered by carrying the firearm are therefore confronted with a dilemma when those same individuals are opposed to guns in general or opposed to the carrying of a firearm for the purposes of personal safety, regardless of their reasons, justifications, or motivations.

The present state of the art may therefore benefit from the systems, methods, and apparatuses for implementing video shooting guns and personal safety management applications as is described herein.

BRIEF DESCRIPTION OF THE DRAWINGS

Embodiments are illustrated by way of example, and not by way of limitation, and will be more fully understood with reference to the following detailed description when considered in connection with the figures in which:

FIG. **1** depicts a non-dischargeable video capture gun apparatus in accordance with described embodiments;

FIG. **2**A depicts a collapsible non-dischargeable video capture gun apparatus in a closed position accordance with described embodiments;

FIG. **2**B depicts an alternative embodiment of a collapsible non-dischargeable video capture gun apparatus in a closed position accordance with described embodiments;

FIG. **3**A depicts a collapsible non-dischargeable video capture gun apparatus in an open position accordance with described embodiments;

FIG. **3**B depicts an alternative embodiment of a collapsible non-dischargeable video capture gun apparatus in an open position accordance with described embodiments;

FIG. **4**A depicts a front view of a collapsible non-dischargeable video capture gun in an open position and having a smartphone housing embodied therein in accordance with described embodiments;

FIG. **4**B depicts a front view of a collapsible non-dischargeable video capture gun in an open position and having an empty smartphone housing embodied therein in accordance with described embodiments;

FIG. **4**C depicts a back view of a collapsible non-dischargeable video capture gun in an open position and having a smartphone housing embodied therein in accordance with described embodiments;

FIG. **5**A depicts a front view of a collapsible non-dischargeable video capture gun in a closed position and having a smartphone housing embodied therein in accordance with described embodiments;

FIG. **5**A depicts a front view of a collapsible non-dischargeable video capture gun in a closed position and having a smartphone housing provisioned therein in accordance with described embodiments;

FIG. **5**B depicts a back view of a collapsible non-dischargeable video capture gun in a closed position and having a smartphone housing provisioned therein in accordance with described embodiments;

FIG. **5**C depicts an alternative front view of a collapsible non-dischargeable video capture gun in a closed position and having an empty smartphone housing embodied therein in accordance with described embodiments;

FIG. **6** depicts an exemplary architecture in accordance with described embodiments;

FIG. **7** depicts a trigger mechanism of a non-dischargeable video capture gun apparatus having dynamic response means in accordance with described embodiments;

FIG. **8** depicts gun holster for a firearm having an antenna and transceiver equipped thereupon in accordance with described embodiments;

FIG. **9** is a flow diagram illustrating a method for implementing video shooting guns and personal safety management applications in accordance with disclosed embodiments;

FIG. **10** shows a diagrammatic representation of a system within which embodiments may operate, be installed, integrated, or configured; and

FIG. **11** illustrates a diagrammatic representation of a machine in the exemplary form of a computer system, in accordance with one embodiment.

DETAILED DESCRIPTION

Described herein are systems, methods, and apparatuses for implementing video shooting guns and personal safety management applications. An exemplary personal safety device may include, for example, a processor and a memory to execute instructions; a rechargeable battery to electrically power the personal safety device; a front facing video camera to capture video data of a scene anterior to a front face of the personal safety device; a rear facing video camera to capture video data of a scene posterior to a rear of the personal safety device; an audio capture device to capture audio data from an environment within which the personal safety device is to operate; a trigger to initiate recording of the front facing video camera, the rear facing video camera, and the audio capture device when triggered by an operator of the personal safety device; and a transceiver to transmit the recorded video data from the front and rear cameras and the captured audio data to a remote location over a network. According to another embodiment, a holster operates in conjunction with a body camera to activate audio and video capture and streaming upon removal of a firearm from the holster.

In the following description, numerous specific details are set forth such as examples of specific systems, languages, components, etc., in order to provide a thorough understanding of the various embodiments. It will be apparent, however, to one skilled in the art that these specific details need not be employed to practice the embodiments disclosed herein. In other instances, well known materials or methods have not been described in detail in order to avoid unnecessarily obscuring the disclosed embodiments.

In addition to various hardware components depicted in the figures and described herein, embodiments further include various operations which are described below. The operations described in accordance with such embodiments may be performed by hardware components or may be embodied in machine-executable instructions, which may be used to cause a general-purpose or special-purpose processor programmed with the instructions to perform the operations. Alternatively, the operations may be performed by a combination of hardware and software.

Embodiments also relate to an apparatus for performing the operations disclosed herein. This apparatus may be specially constructed for the required purposes, or it may be a general purpose computer selectively activated or reconfigured by a computer program stored in the computer. Such a computer program may be stored in a computer readable storage medium, such as, but not limited to, any type of disk including floppy disks, optical disks, CD-ROMs, and magnetic-optical disks, read-only memories (ROMs), random access memories (RAMs), EPROMs, EEPROMs, magnetic or optical cards, or any type of media suitable for storing electronic instructions, each coupled to a computer system bus.

The algorithms and displays presented herein are not inherently related to any particular computer or other apparatus. Various general purpose systems may be used with programs in accordance with the teachings herein, or it may prove convenient to construct more specialized apparatus to perform the required method steps. The required structure for a variety of these systems will appear as set forth in the description below. In addition, embodiments are not described with reference to any particular programming language. It will be appreciated that a variety of programming languages may be used to implement the teachings of the embodiments as described herein.

Embodiments may be provided as a computer program product, or software, that may include a machine-readable medium having stored thereon instructions, which may be used to program a computer system (or other electronic devices) to perform a process according to the disclosed embodiments. A machine-readable medium includes any mechanism for storing or transmitting information in a form readable by a machine (e.g., a computer). For example, a machine-readable (e.g., computer-readable) medium includes a machine (e.g., a computer) readable storage medium (e.g., read only memory ("ROM"), random access memory ("RAM"), magnetic disk storage media, optical storage media, flash memory devices, etc.), a machine (e.g., computer) readable transmission medium (electrical, optical, acoustical), etc.

Any of the disclosed embodiments may be used alone or together with one another in any combination. Although various embodiments may have been partially motivated by deficiencies with conventional techniques and approaches, some of which are described or alluded to within the specification, the embodiments need not necessarily address or solve any of these deficiencies, but rather, may address only some of the deficiencies, address none of the deficiencies, or be directed toward different deficiencies and problems which are not directly discussed.

FIG. **1** depicts a non-dischargeable video capture gun apparatus in accordance with described embodiments. In particular, there are depicted both a front camera **110** and a back camera on the video shooting gun and also an antenna **105** to enable the gun apparatus to communicate with, for example, a cloud computing architecture under the control of microcontroller **100**. For instance, a transceiver **135** embedded within or configured with the gun apparatus may communicate with a remote device, such as a cellular base station which in turn communicates information between the gun apparatus to a cloud computing analytics system or storage repository, etc.

According to certain embodiments, the gun apparatus captures video and audio via the depicted cameras. For instance, video may be captured by the gun apparatus of a scene in front of the gun apparatus via front camera **110** or of a scene behind the gun apparatus via back camera **115**. According to certain embodiments, one or more side cameras or auxiliary cameras are additionally included, such as

the depicted side camera(s) **125** shown here. An audio microphone **130** captures audio signals from the environment and scene within which the gun apparatus operates. Further depicted is battery **120** to power the gun apparatus. According to described embodiments the apparatus is battery **120** operated and may be re-charged via a charging station or via a USB powered connector.

Microcontroller having at least a processor and a memory embodied therein is further depicted and is capable of executing instructions and performing operations including, for instance, initiating the recording and capture of audio and video as well as coordinating the streaming of such audio and video to a remote repository, initiating events, receiving information, receiving alerts, sending and triggering alerts, etc.

It cannot be denied that guns and gun ownership and gun policy in general can be a contentious issue with complex considerations on all sides of the issues. However, described herein is a non-dischargeable gun apparatus, meaning that it cannot and indeed does not fire ammunition, and therefore, is not to be considered a lethal weapon. Such a gun apparatus provides specific benefits and capabilities to those individuals who desire for a sense of personal protection yet are opposed, for whatever their reason, to personal gun ownership or gun use.

For example, the mere act of carrying a non-dischargeable gun apparatus such as that which is disclosed herein provides both a psychological benefit through a perceived sense of personal safety by carrying such a gun apparatus versus not carrying such an apparatus and additionally provides an actual deterrent to potential threats to an individual's personal safety as the gun apparatus can be designed to look authentic. For instance, the gun apparatus depicted here includes a faux gun barrel which, though it is non-functional, enables the individual carrying such a gun apparatus to project a show of force in the face of danger. It is very possible that the mere showing of such gun apparatus provides an increase in personal safety when confronted with a threat as the perpetrator of the threat is likely to retreat, with the perpetrator having no way of knowing that the gun apparatus is not in fact a lethal weapon.

In the event that the perpetrator does not retreat, the gun apparatus is capable of capturing video and audio of the situation and summoning the authorities according to certain embodiments.

Moreover, the non-dischargeable gun apparatus is capable of capturing audio and video and other telemetry data in support of an investigation into a crime, such as an attempted mugging, and in a worst case scenario, the non-dischargeable gun apparatus may provide invaluable data and telemetry in support of an investigation into an actual firearm shooting by the perpetrator.

Such a non-dischargeable gun apparatus may be manufactured by conventional gun manufacturers wishing to enter the segment of the market for non-lethal personal protection devices. Many manufacturers already have experience in this space as they produce other non-lethal personal safety devices such as mace, Tasers™, etc.

According to a particular embodiment, the non-dischargeable gun apparatus does not fire bullets or ammunition when a trigger **165** is pulled, however, the non-dischargeable gun apparatus captures audio and video. According to one embodiment, the non-dischargeable gun apparatus captures and immediately streams audio and video to a remote cloud repository if connected via transceiver **135** to a network. According to another embodiment, the non-dischargeable gun apparatus captures and immediately streams audio and video to a remote cloud repository via transceiver **135** upon establishing a connection with a network if the device is not connected with the network at the time that the trigger **165** is pulled.

According to a particular embodiment, the non-dischargeable gun apparatus captures and records front facing video via front camera **110** and captures and records back facing video via back camera **115** and captures and records audio via audio microphone **130** and optionally captures and records side facing video via one or more side cameras **125**. According to such an embodiment, the non-dischargeable gun apparatus transmits the captured and recorded video and audio stream to a remote cloud based repository along with logged telemetry data including, for example, the time of the trigger pull, time markers for the audio and video streams, GPS location information for the non-dischargeable gun apparatus, and an identification associating the non-dischargeable gun apparatus with the owner of the non-dischargeable gun apparatus.

According to certain embodiments, recordation and capture of the audio and video streams result in a locally stored video file as well as a transmitted audio/video stream. Such a locally stored video file contains one or more of the following elements: video data, date and time stamp for the video capture time, GPS location of the video capture, information of the owner of the personal safety apparatus and optionally finger-print identification for the user. Such information may additionally be transmitted to a cloud computing repository with the audio and video stream. According to certain embodiments, the video is searchable and may be tagged to identify content. For instance, the video may be searched and tagged automatically utilizing video search tools and video analytics.

According to a particular embodiment, the audio, video, and telemetry captured, recorded, and transmitted to the remote cloud based repository is stored for later analysis. According to such an embodiment, the information transmitted to the cloud based repository additionally provides a full accounting of the incident and additionally provides a full audio and video recording of the incident supplemented by the telemetry data. Such data may be used for investigative purposes, training purposes, legal purposes, etc., providing actual evidence which almost never exists with actual shootings.

FIG. **2**A depicts a collapsible non-dischargeable video capture gun apparatus in a closed position accordance with described embodiments. The gun apparatus may, but need not resemble a firearm precisely. For instance, depicted here is a non-dischargeable video capture gun apparatus which is capable of being opened and closed, thus making it easier to conceal and potentially more likely to be carried as it can be carried, for instance, in a purse, handbag, small holster, and so forth.

Moreover, as depicted, the gun apparatus depicted here lacks the faux gun barrel on its forward face **205** in comparison to the gun apparatus at FIG. **1**, and thus, resembles an actual gun or firearm to a lesser extent, especially when in a closed position. Such an apparatus may be more desirable to certain individuals, yet provide many the aforementioned benefits.

For instance, the non-dischargeable video capture gun apparatus depicted here includes antenna and embedded transceiver **200** and includes additional sensor **245** capable of reading biometric data from user. Rear camera, **275**, side camera **240**, and front camera **220** are additionally depicted here as is audio capture device **225**. Depth sensor **215** is depicted here as an optional sensor capable of sensing and

determining depth to objects in a scene recorded by front facing camera **220**. Further depicted are GPS sensor **235** capable of receiving and recording GPS coordinates and a grip lock **260** and hinge pivot **250**.

FIG. **2**B depicts an alternative embodiment of a collapsible non-dischargeable video capture gun apparatus in a closed position accordance with described embodiments. Similar to FIG. **2**A, various sensors, cameras, and audio capture components are depicted. Further depicted here on the forward face **205** are two faux gun barrels **210** to increase the authenticity of the gun apparatus when in an open position. Notwithstanding the presence of the faux gun barrels **210** the gun apparatus remains a non-dischargeable and non-lethal self-protection device.

FIG. **3**A depicts a collapsible non-dischargeable video capture gun apparatus in an open position accordance with described embodiments. As can be seen here, the gun apparatus may be opened by opening grip **385** which pivots to an open position via hinge pivot **350** so as to more closely resemble a firearm. Depicted here the forward face **305** of the gun apparatus lacks the faux gun barrel(s).

According to the depicted embodiment, there are provided with the gun apparatus a rear camera **375**, a front camera **320**, one or more side cameras **340**, a GPS sensor **335**, an audio capture device **325**, a depth sensor **315**, antenna and transceiver **300**, and biometric sensor **345**. Now viewable also in this embodiment with the grip **385** in the open position is trigger **365**.

FIG. **3**B depicts an alternative embodiment of a collapsible non-dischargeable video capture gun apparatus in an open position accordance with described embodiments. Here, the gun apparatus resembles a firearm to a greater degree due to its having one or more faux gun barrels **310** on its forward face **305** in addition to the other sensors and cameras described above.

FIG. **4**A depicts a front view **400** of a collapsible non-dischargeable video capture gun with the grip **485** in an open position and having a smartphone housing embodied therein in accordance with described embodiments.

According to particular embodiments the non-dischargeable video capture gun apparatuses may take the form of a smartphone and case when in a closed or collapsed position or alternatively be opened to take the form factor of an authentic appearing firearm. However, because the apparatus is a non-dischargeable video capture gun apparatuses and not an actual firearm, it is not considered a concealed weapon, but may nevertheless be utilized to deter a potential assailant as the visual appearance will likely scare off a potential attacker.

According to certain embodiments, the gun apparatus forms a housing for a smartphone and in such a way may utilize certain functionalities of the smartphone device when provisioned with the gun apparatus while retaining other functionalities within the gun apparatus itself, whether or not they are redundant to or duplicated by the smart phone.

For instance, as is depicted here, the gun apparatus is depicted in an open position in which it can be seen as having its own capabilities embodied within the gun apparatus are one or more gun barrel(s) **410** upon the forward face **405** of the gun apparatus, a depth sensor **416**, front camera **420** and rear camera **475**, audio capture device **425**, biometric sensor **445**, and antenna and transceiver **435**.

The provisioned smartphone **499** as depicted here is mechanically matched to the housing formed by the gun apparatus such that the smartphone **499** may be attached and held securely in place. Such a smartphone **499** when provisioned with the gun apparatus may provide additional capabilities. For instance, the gun apparatus may communicate with the smartphone **499** via blue tooth or USB or other physical or wireless interface and may, for instance, store information on the smart phone, operate in conjunction with a software mobile "app" or application executing on the smartphone **499**, or utilize the wireless and cellular communication capabilities of the smartphone **499** as a redundant communication path to the remote cloud based storage repository in the event that the antenna and transceiver **435** are unable to establish a connection or unable to establish a satisfactory connection through which to stream video and audio to the cloud based repository.

According to described embodiments, video and audio streams as well as telemetry data are first cashed via memory within the apparatus and in the event of a network connectivity issue, the cached data is stored until it may later be transmitted to a remote cloud based repository or a remote destination according to its configured operation.

According to certain embodiments, video and audio streams as well as telemetry data are first cashed via memory within the apparatus and are subsequently automatically uploaded to a clouded based repository when a WiFi transceiver of the apparatus gains network connectivity.

According to certain embodiments, cashed, streamed, and archived audio, video, and telemetry data is protected from deletion and manipulation by the cloud based repository. For instance, in certain embodiments, the data cannot be erased or deleted from the apparatus or the cloud based repository for safety purposes in the event that evidence is captured and the apparatus falls outside of the rightful owner's control. In certain embodiments, varying levels of authentication may be configured by a user to pre-determine under what circumstances, if any, such data may be deleted from the apparatus or from the cloud based repository once transmitted for remote storage.

FIG. **4**B depicts a front view **401** of a collapsible non-dischargeable video capture gun in an open position and having an empty smartphone housing embodied therein in accordance with described embodiments. Here, the smartphone has not yet been provisioned, and as such, the interior portion of the housing for the smartphone **440** may be observed. For instance, it can be seen the interior of the faux gun barrels as well as the trigger **415** mechanism on the opposing side of the smart phone housing which consumes approximately half of the width of the apparatus such that when the smart phone is provisioned into the smart phone housing **440** the trigger **415** mechanism and the provisioned smartphone do not mechanically interfere with one another. Additionally depicted here are the grip **420** in an opened position and antenna and transceiver **435**. Biometric sensor **445** is depicted upon the grip and the rear camera **475** may be observed on the back side of the antenna's mount.

FIG. **4**C depicts a back view **402** of a collapsible non-dischargeable video capture gun in an open position and having a smartphone housing embodied therein in accordance with described embodiments. Here the smartphone is not yet provisioned into the smart phone housing on the opposing side of the apparatus as it may be observed that the opening formed by opening around the trigger **465** is not blocked by the backside of such a provisioned smartphone.

Further depicted here is hinge pivot **450** permitting the grip **420** of the apparatus to open and close, the biometric sensor **445**, the trigger **465**, the antenna and transceiver **435**, faux gun barrels **410**, depth sensor **416**, front camera **420**, audio capture **425** device and microcontrollers **450** and **451**.

For instance, such microcontrollers may include at least a memory and processor to perform and carry out operations

and execute stored instructions in accordance with the described embodiments. For example, such processing may include capturing and storing audio and video streams and causing the antenna and transceiver to transmit audio and video streams or stored audio and video data to a remote location, such as a cloud computing service or cloud based data storage facility.

FIG. **5**A depicts a front view **500** of a collapsible non-dischargeable video capture gun in a closed position and having a smartphone housing provisioned therein in accordance with described embodiments. As noted previously, the non-dischargeable video capture gun may be opened and closed, so as to take an open form or a collapsed form as described. Here, the smartphone **599** is provisioned and encased within the smartphone housing of the non-dischargeable video capture gun apparatus. It may be observed upon the apparatus the previously described components including, for instance, audio capture **525** device, front camera **520**, depth sensor **515**, faux gun barrels **510**, and the antenna and transceiver **535**. The closed grip **520** may additionally be observed on the bottom side of the apparatus.

FIG. **5**B depicts a back view **501** of a collapsible non-dischargeable video capture gun in a closed position and having a smartphone housing provisioned therein in accordance with described embodiments. The smart phone housing cannot be seen as it is embodied within the opposing side of the apparatus and the space formed by the opening for the trigger mechanism is covered by the closed grip **520**. Hinge pivot **550** is shown as are the biometric sensor **545** and microcontrollers **551** and **552**.

FIG. **5**C depicts an alternative front view **502** of a collapsible non-dischargeable video capture gun in a closed position and having an empty smartphone housing embodied therein in accordance with described embodiments. As depicted here, the smart phone housing **515** includes a backing plate thus closing off the space from the trigger mechanism and opening on the opposing side of the apparatus.

FIG. **6** depicts an exemplary architecture in accordance with described embodiments. For instance, as can be seen apparatuses **600** communicate with a cloud computing architecture **605** over a network. According to certain embodiments, presentation platform **610** interfaces with the cloud computing architecture **605** to exchange data, information, audio, video, telemetry, etc., between the described apparatuses and other information consumers connected with the cloud computing architecture **605**. For instance, presentation platform **610** may interface to a wisdom engine **620** which provides data analytics and provides probability based predictions based on available data. Prognosis platform **645** is further depicted which operates in conjunction with an RDBMS **625** and/or data reservoir **630** or other database and data storage architecture. Prognosis platform is further interfaced to multiple data sources **640** via data dendrons **635** as shown.

According to certain embodiments, audio streams, video streams, and other telemetry data originating from apparatuses **600** is stored by the cloud computing architecture **605** and available to the prognosis platform **645** and wisdom engine **620** as one of or a subset of one of the data sources **640**. For instance, data originating from the non-dischargeable video capture gun apparatuses as described herein may be stored by the cloud computing architecture **605** and subjected to further analysis in support of rendering predictions.

In accordance with certain embodiments, audio and video streams are transmitted to a cloud computing architecture **605** and replicated, copied, or forwarded to law enforcement agencies, such as a justice department, local, state, or federal law enforcement agencies, etc. Such data may then be utilized as evidence, utilized for training purposes, or utilized in support of conducting statistical analysis of interest to such agencies.

According to certain embodiments, presentation platform **610** integrates with law enforcement agency systems so as to provide data, predictions, evidence, and expose analytical tools provided by the presentation platform via wisdom engine **620**, to the law enforcement agencies. Such services may be provided as a subscription model or as a cloud based service to such agencies.

According to certain embodiments, cloud computing architecture **605** aggregates risk data from multiple sources including from apparatuses streaming and transmitting data to cloud computing architecture **605** for storage and initiates outgoing alerts to users of such apparatuses as well as other users subscribing to such a service. For instance, cloud computing architecture **605** may analyze data and push out notifications to users of such apparatuses **600** when entering a geographical area assessed to be above a given risk threshold. In certain embodiments such notifications are user configurable. In other embodiments, the cloud computing architecture **605** determines a risk threshold and pushes notifications to users near or entering such an area. Such risk determinations may be dynamic based on time of day, active or current incident reporting within a geographical area, a quantity of time since risk associated incident reporting occurred for other users, historical risk incident reporting, etc. Incidents may further be based on subscriptions of the cloud computing architecture **605** to other sources, such as police databases and notifications providing risk assessments for various geographic areas.

For instance, users subscribing to a public safety alert system through an app or other mechanism may thus receive alerts which are based at least in part on information collected via such non-dischargeable video capture gun apparatuses, regardless of whether those users carry such an apparatus themselves.

According to a particular embodiment, the non-dischargeable video capture gun apparatus **600** communicates with a user's smartphone via Bluetooth and utilizes the user's smartphone to interface with the cloud computing architecture **605** via a cellular or other wireless network. In other embodiments the apparatus includes a cellular (e.g., 3G, 4G, LTE, etc.) transceiver and communicates with cloud computing architecture **605** via an embedded transmitter or transceiver and optionally utilizes the cellular communication capabilities of the user's smartphone as a backup or redundancy path to the cloud computing architecture **605**.

According to certain embodiments, the cloud computing architecture **605** aggregates data and publishes updates to publically accessible mapping services. For instance, the cloud computing architecture **605** may publish incident locations and danger locations to the mapping service for consumption by subscribers to the mapping service. Such published locations may indicate a type or severity of incident based on whether the incident is active and ongoing, time since the incident occurred, severity of the incident, etc.

According to certain embodiments the presentation platform **610** of the cloud computing architecture **605** provides statistical analysis and publishes predictions **615** to law enforcement entities. Such law enforcement entities may utilize such data to perform proactive policing and enforce-

ment in areas determined to have a statistically higher incidence of crime rather than reactively waiting for such incidents to occur.

For instance, an IDPSM or "IoT Driven Personal Safety Management" System or "IDPSM system analytics tool" of the cloud computing architecture **605** may generate pattern and forewarning notifications based on predicted safety concerns. Such notifications may then be utilized to strategically locate and re-deploy idled or underused public safety officers in order to minimize reaction time.

According to certain embodiments, human intervention is required before a police dispatch is requested by the cloud computing architecture **605** responsive to receiving an alert from the apparatus **600**. In other embodiments, the apparatus **600** requests a police dispatch and the cloud computing architecture **605** responsively receives and passes or communicates the requested police dispatch to an appropriate law enforcement agency based on geographic location of the apparatus **600** and based on criticality of the incident associated with the alert.

In alternative embodiments, the cloud computing architecture **605** requests a police dispatch automatically and without human intervention based on one or more of statistical analysis of the incoming telemetry data from the apparatus **600**, based on a criticality flag passed with the alert from the apparatus **600**, or based on automated object recognition performed by the cloud computing architecture **605**. For instance, according to certain embodiments, when a live stream is received from the apparatus **600**, the video frames are analyzed by cloud computing architecture **605** for known threat objects, such as a firearm, knife, rifle, shotgun, or other weapon. Audio streams received may likewise be analyzed for threat events, such as gunshots or selective terms, phrases, or words captured in conjunction with the event triggered by the apparatus **600** and other available data including, for instance, the criticality of the alert received.

In accordance with certain embodiments, the non-dischargeable video capture gun apparatuses **600** form part of the Internet of Things or "IoT" and engage in machine to machine communications between such apparatuses **600** and the cloud computing architecture **605**.

For instance, the apparatuses **600** may communicate with and share information with as well as retrieve information from the cloud computing architecture **605**. In accordance with certain embodiments, IoT communications between the apparatuses **600** and the cloud computing architecture **605** are regulated according to a criticality flag. According to other embodiments, the apparatuses **600** must self authenticate with the cloud computing architecture **605** prior to sending or receiving information as part of IoT communications.

According to a particular embodiment, authentication by the apparatuses **600** with the cloud computing architecture **605** requires correctly passing a compliance check bit or a security check bit via the network to the cloud computing architecture **605** when demanded or prior to engaging in IoT communications.

According to certain embodiments, return of a compliance check bit or a security check bit to the cloud computing architecture **605** from the apparatuses incorporates one or more of GPS location data of the apparatus **600**, User identifier of the apparatus **600**, device identifier of the apparatus **600**, or a time stamp from the apparatus **600**.

According to particular embodiments, the apparatus **600** embodies an IoT Driven Personal Safety Management system or "IDPSM" system. For instance, the apparatus may appear as an authentic firearm, yet record audio, video, and other telemetry data rather than fire ammunition. According to such embodiments, the apparatus **600** engages in IoT communications with a cloud computing architecture **605** to facilitate personal safety and personal protection of a user. Such IoT communications include capturing and caching live audio and video streams and transmitting the live audio and video stream to the cloud computing architecture **605**. The cloud computing architecture **605** may then in turn relay or forward or simply provide for retrieval the live audio and video stream to public safety entities, such as a police department. In one embodiment police department systems are integrated or connected with the presentation platform **610** of the cloud computing architecture **605** and utilize a GUI interface to retrieve and view the live audio and video stream whereas in other embodiments, a URL or other resource locater is provided to the police with a dispatch request and optionally with a criticality flag.

FIG. **7** depicts a trigger **715** mechanism of a non-dischargeable video capture gun apparatus having dynamic response means in accordance with described embodiments. For instance, according to described embodiments, the trigger **715** may be configured to dynamically respond differently according to increasing incident criticality **705**. For example, according to one embodiment, with increasing trigger **715** pull or increasing pressure, the determined criticality increases and the apparatus initiates increasingly heightened safety measures for the user. In one such embodiment, simply pressing or touching the trigger will initiate device recording, such as causing the apparatus to begin capturing audio and video streams from the audio capture device(s) and from its front, back, and side cameras. For example, there may be a "record" **720** zone in which a slight or minimal trigger pull within a threshold distance or range will cause the device to begin recording and capturing audio, video, and other telemetry on behalf of the user. Such a "record" **720** mode may additionally cause the apparatus to transmit the audio, video, and telemetry data to a cloud based repository, such as cloud computing architecture **605** as depicted at FIG. **6**.

According to a particular embodiment, a criticality flag is additionally communicated with the audio, video, and telemetry data originating from the apparatus. The cloud computing architecture **605** may analyze such a criticality flag to determine a responsive action to the incoming data, such as storing, storing and forwarding, storing, forwarding, and alerting other entities, and so forth.

Further depicted is "alert" **725** mode which may be dynamically activated on behalf of a user that pulls or presses upon the trigger **715** mechanism within a second threshold range, such as more than a minimal or base threshold below which only record **720** mode is activated but less than a full trigger pull which will initiate the "panic" **730** mode as depicted.

For example, alert **725** mode may cause the recordation of the audio, video, and other telemetry as well as transmission of such data to the cloud computing architecture **605** but additionally initiate an automated police dispatch. For example, a criticality flag may be passed or communicated with the data transmitted to the cloud computing architecture **605** which indicates a heightened incident criticality requesting a police officer dispatch on a non-urgent basis or according to other defined incident response levels established for the local public safety authorities and the cloud computing architecture **605** triggering such a request.

Another incident criticality level is further depicted as the "panic" **730** mode in which a user executing a full trigger **715** pull or a trigger pressure in excess of a threshold amount

will initiate a highest priority request for help, thus causing the apparatus to record and transmit audio, video, and telemetry data with a maximum priority criticality flag requesting the cloud computing architecture **605** to immediately summon police or other public safety officials with urgency.

According to such embodiments, activation of the apparatus via the trigger **715** mechanism initiates recording of the audio, video, and telemetry and streams such data to the cloud computing architecture **605** making it available to public safety officials in real-time or near real time who may then further assess the active live stream originating from the apparatus to triage and assess whether or not police officers are dispatched.

Moreover, if a crime is committed, the audio/video stream and telemetry data streamed and archived via cloud computing architecture **605** may then be utilized as evidence for purposes of criminal prosecution and/or exoneration by providing a true and accurate accounting of the incident in question.

Even if a potential assailant is masked, substantial evidence is still collected via the cameras and other sensors, such as the precise timing of events, GPS coordinates, approximate height, weight, and build of the assailant, potentially voice data and other environmental audible evidence, escape path of the assailant, and so forth. Such information is collected by the apparatus and streamed in real-time through the cloud computing architecture **605** to appropriate law enforcement agencies that are then enabled to act more quickly due to the high quality evidentiary data.

According to particular embodiments, the degree to which the trigger is pulled affects the ability for data to be altered or removed from the apparatus. For instance, the apparatus may be configured in such a way that activating "record" mode **720** with a minimal trigger pull will cause the apparatus to capture and record/cache audio, video, and telemetry data locally but not upload such data to the cloud computing architecture **605**. In such a mode, the captured data may then be manually set for upload to the cloud computing architecture **605** or may be deleted by the user, etc. However, if the "panic" **730** mode is activated due to a full trigger pull or other similar assessment of the trigger **715** mechanism, then the apparatus may be configured in such a way to record and immediately live stream the audio/video/telemetry data to the cloud computing architecture **605** as well as mark the data cashed or stored on the apparatus for content protections such that it cannot be deleted by a local user, for instance, in the event the apparatus falls into the hands of the assailant or another malicious party.

In such a way, a person seeking increased personal safety but not wishing to carry a firearm may provide an increased level of self protection through the deterrent element of the apparatus which may be made to appear as a realistic and authentic firearm to a would be assailant and further provide increased self-protection through the ability to immediately request police assistance if appropriate as well as capture crucial evidence should a crime actually be committed or attempted.

In accordance with a particular embodiment, the apparatus automatically generates and uploads an alert to the cloud computing architecture **605**. According to certain embodiments, the alert is a criticality flag which is utilized to determine at the cloud computing architecture **605** what response to take upon receipt of such an alert from the apparatus. According to certain embodiments, the alert is generated automatically by the apparatus responsive to a sensor other than the trigger. For instance, biometric sensor readings may be utilized to trigger an alert. Audio data, video data, GPS data, depth sensor data, or some combination thereof may be utilized to generate an alert. According to certain embodiments, an alert is automatically generated and transmitted to the cloud computing architecture **605** responsive to a trigger **715** pull and the alert is prioritized according to sensor data including the degree of trigger pull in combination with other sensor data including biometric data, audio, video, depth, GPS, and other available telemetry.

According to certain embodiments, the cloud computing architecture **605** performs statistical analysis of incoming audio, video, and other telemetry data to prioritize incoming alerts. Prioritization may be based on incoming data from a single apparatus or based on incoming data aggregated from multiple such apparatuses transmitting data to the cloud computing architecture **605**. According to certain embodiments, the prioritization of the incoming alert is then utilized to determine whether or not a police dispatch is requested and if so, with what urgency. According to certain embodiments, a criticality flag is applied to the alert or updated by the cloud computing architecture **605** before the alert is forwarded to police or other public safety entities. According to certain embodiments, an alert generated by such an apparatus is received by cloud computing architecture **605** and then transmitted to a remote public safety entity with a criticality flag and with a live audio and video stream originating from the apparatus and passed through the cloud computing architecture **605**.

According to a particular embodiment, once a live stream of audio and video is dispatched and retrieved by a police officer accepting the case assignment, the same live stream of audio and video cannot be retrieved by another police officer. In a related embodiment, police officers on-scene at or near the location associated with the originating live stream of audio and video from the apparatus may also retrieve the live stream of audio and video. In yet other embodiments, access is role based, for instance, detectives may retrieve archived footage but patrol officers may not.

FIG. **8** depicts gun holster **899** for a firearm having an antenna and transceiver **836** equipped thereupon in accordance with described embodiments. Further depicted is a gun **888** within the holster. Notably, the gun **888** is an actual firearm capable of firing live ammunition. The holster **899** an/or optionally the grip **885**, may embody any of the sensors described above, for instance, as depicted there is a GPS sensor **835** as well as a biometric sensor **845** capable of reading and capturing fingerprints as well as additional biometric telemetry data from a user.

According to the described embodiments, the non-dischargeable video capture gun apparatus may be utilized with both personal and also public Safety Management Applications. As depicted, the IoT communications, alerts, and capabilities described above for the non-dischargeable video capture gun apparatus may be extended to Public Safety purposes as well, including for use by public safety officers including police officers and other on-duty law enforcement personnel. As depicted here, a holster is equipped with the antenna and transceiver **836** capable to engage in IoT communications with the cloud computing architecture **605**. The holster **899** may communicate with a body camera worn by a police officer capable of capturing audio and video and the holster **899** may relay such information to the cloud computing architecture **605**. In such a way, the cloud computing architecture **605** records incidences for the law enforcement officers when such a police officer is on duty in accordance with described embodiments.

According to described embodiments, a gun placement sensor **833** detects whether the police officer's firearm is holstered at any given time. According to such embodiments, removal of the gun **888** from the holster **899** automatically activates a body cam worn by the police officer, for instance, causing audio and video streams to be captured by the body camera. The streams may be communicated to the holster via, for example, Bluetooth or other personal connectivity network, and then relayed to the cloud computing architecture **605** via cellular or other wireless communications. In other embodiments, removal of the gun from the holster automatically activates recording by the police officer's body camera and the body camera having its own transceiver and antenna may then communicate the live audio and video streams to the cloud computing architecture **605** without relaying such data to the holster apparatus. The gun placement sensor **833** may be a contact switch or other sensor capable of determining whether the gun is holstered and activating the body camera upon the removal of the gun from the holster.

FIG. **9** is a flow diagram illustrating a method **900** for implementing video shooting guns and personal safety management applications in accordance with disclosed embodiments. Method **900** may be performed by processing logic that may include hardware (e.g., circuitry, dedicated logic, programmable logic, microcode, etc.), software (e.g., instructions run on a processing device) to perform various operations such as storing records, processing, executing, providing, determining, receiving, initiating, caching, transmitting, sending, returning, etc., in pursuance of the systems and methods as described herein. For example, an apparatus embodying a personal safety device as depicted at FIGS. **1** through **5** may implement the described methodologies. Some of the blocks and/or operations listed below are optional in accordance with certain embodiments. The numbering of the blocks presented is for the sake of clarity and is not intended to prescribe an order of operations in which the various blocks must occur.

At block **905**, the flow diagram begins with a method performed by a personal safety device having at least a processor and a memory therein.

At block **910**, processing logic receives a trigger event from a trigger of the personal safety device.

At block **915**, processing logic initiates recording video data via a front facing video camera of the personal safety device responsive to the trigger event, the front facing video camera to capture video data of a scene anterior to a front face of the personal safety device.

At block **920**, processing logic initiates recording video via a rear facing video camera of the personal safety device responsive to the trigger event, the rear facing video camera to capture video data of a scene posterior to a rear of the personal safety device.

At block **925**, processing logic initiates audio capture of audio from an environment within which the personal safety device is operating responsive to the trigger event.

At block **930**, processing logic caches the recorded video data and audio data in the memory of the personal safety device.

At block **935**, processing logic transmits, via a wireless transmitter, the cached video data and audio data as a stream to a remote location over a network.

According to another embodiment of method **900**, the personal safety device further includes a GPS sensor; a time module; a cache within the memory of the personal safety device; and in which the trigger when triggered by the operator of the personal safety device causes the memory to receive GPS data from the GPS sensor, to receive a time stamp from the time module, and to receive the video data from the front and rear cameras and the audio data from the audio capture device.

According to another embodiment of method **900**, the personal safety device further includes: a data store; in which the trigger when triggered by the operator of the personal safety device causes the cache of the memory to persistently store the cached video data from the front and rear cameras and the audio data from the audio capture device in the data store and to transmit the cached video data from the front and rear cameras and the audio data from the audio capture device to the remote location over the network.

According to another embodiment of method **900**, the transceiver to transmit the recorded video data from the front and rear cameras and the captured audio data to a remote location over a network includes the transceiver to transmit the recorded video data from the front and rear cameras and the captured audio data as a live data stream from the memory of the personal safety device to a cloud computing repository over a public Internet via one of: a 3G cellular wireless connection; a 4G cellular wireless connection; an LTE cellular wireless connection; a GSM cellular wireless connection; a CDMA cellular wireless connection or via a WiFi wireless connection.

According to another embodiment of method **900**, the trigger to initiate recording of the front facing video camera, the rear facing video camera, and the audio capture device when triggered by an operator of the personal safety device includes: a mechanical gun trigger to be triggered by the operator via an affirmative physical action of the operator of the personal safety device.

According to another embodiment of method **900**, the trigger includes one of: a gun trigger; a mechanical trigger; a push button; a pressure sensitive trigger; and in which the trigger to initiate different events based on a distance an operator of the personal safety device pulls the trigger or based on a pressure exerted upon the trigger by the operator of the personal safety device.

According to another embodiment of method **900**, the trigger to initiate different actions includes the trigger to initiate one the following three events based on the distance the operator pulls the trigger based on the pressure exerted upon the trigger by the operator: (i) the trigger to initiate a record mode event when the operator pulls the trigger a first distance or with a first pressure, in which the record mode is to record and store locally the video data from the front and rear cameras and the audio data from the audio capture device and to transmit the recorded video data and audio data to a cloud based repository for personal use without relaying the transmitted video data and audio data from the cloud based repository to any public safety or law enforcement entity; (ii) the trigger to initiate an alert mode event when the operator pulls the trigger a second distance greater than the first distance or with a second pressure greater than the first pressure, in which the alert mode is to record and store locally the video data from the front and rear cameras and the audio data from the audio capture device and to transmit the recorded video data and audio data to the cloud based repository with an alert to communicate the transmitted video data and audio data from the cloud based repository to a public safety or law enforcement entity; (iii) the trigger to initiate a panic mode event when the operator pulls the trigger a third distance greater than the first and second distances or with a third pressure greater than the first and second pressures, in which the panic mode is to record and

store locally the video data from the front and rear cameras and the audio data from the audio capture device and to transmit the recorded video data and audio data to the cloud based repository with an alert to communicate the transmitted video data and audio data from the cloud based repository to a public safety or law enforcement entity and with a criticality flag requesting urgent dispatch of police to the location of the personal safety device.

According to another embodiment of method **900**, the trigger further causes the personal safety device to initiate capture of GPS location information, time stamp information, operator identity information, personal safety device identity information, and a criticality level based on the degree of trigger pull by the operator of the personal safety device; and in which the transceiver to transmit the recorded video data from the front and rear cameras and the captured audio data to the remote location over a network includes the transceiver to live stream the video data and the audio data to the remote location with the GPS location information, the time stamp information, the operator identity information, the personal safety device identity information; and a criticality flag based on the criticality level.

According to another embodiment of method **900**, the remote location includes a cloud computing architecture providing cloud based services; in which the cloud computing architecture initiates different events based upon the criticality flag received with the streamed video data and the audio data and telemetry data transmitted concurrently therewith; in which the cloud computing architecture triggers a request for police dispatch to a GPS location indicated via the telemetry data received based on a criticality flag received indicating a criticality of an event at the GPS location based on an affirmative action of the operator of the personal safety device.

According to another embodiment of method **900**, the remote location includes a cloud computing architecture providing cloud based services; in which the cloud computing architecture initiates different events based upon the streamed video data and the audio data and telemetry data transmitted with the audio and video data stream; in which the cloud computing architecture initiates one or more of the following events: receives and archives the streamed video data and the audio data and telemetry data transmitted; receives and relays the streamed video data and the audio data and telemetry data transmitted to a law enforcement entity; requests non-urgent police dispatch on behalf of the operator of the personal safety device; requests urgent police dispatch on behalf of the operator of the personal safety device; requests police dispatch without human intervention based on the streamed video data and the audio data and telemetry data transmitted; and requests police dispatch subsequent to human intervention and review of the streamed video data and the audio data and telemetry data transmitted.

According to another embodiment of method **900**, the remote location includes a cloud computing architecture providing cloud based services; and in which the cloud computing architecture analyzes the streamed video data transmitted to identify, without human intervention, a weapon within the video data captured by the front facing camera; and in which the cloud computing architecture requests urgent police dispatch on behalf of the operator of the personal safety device upon identification of the weapon.

According to another embodiment of method **900**, the personal safety device embodies a non-dischargeable video capture gun apparatus having a gun shape defined by at least a gun grip, one or more gun barrels, and gun trigger; and in which the personal safety device does not fire ammunition.

According to another embodiment of method **900**, the front facing video camera is to capture video data of a target at which the personal safety device is pointed; in which the rear facing video camera is to capture video data of an operator holding the personal safety device.

According to another embodiment of method **900**, wherein the personal safety device further includes: one or more side facing cameras to capture video data of a scene to a lateral left or lateral right of the personal safety device.

In accordance with a particular embodiment, there is non-transitory computer readable storage media having instructions stored thereon that, when executed by a processor of a personal safety device, the instructions cause the personal safety device to perform operations including: receiving a trigger event from a trigger of the personal safety device; initiating recording video data via a front facing video camera of the personal safety device responsive to the trigger event, the front facing video camera to capture video data of a scene anterior to a front face of the personal safety device; initiating recording video via a rear facing video camera of the personal safety device responsive to the trigger event, the rear facing video camera to capture video data of a scene posterior to a rear of the personal safety device; initiating audio capture of audio from an environment within which the personal safety device is operating responsive to the trigger event; caching the recorded video data and audio data in the memory of the personal safety device; and transmitting, via a wireless transmitter, the cached video data and audio data as a stream to a remote location over a network.

FIG. **10** shows a diagrammatic representation of a system **1000** within which embodiments may operate, be installed, integrated, or configured. In accordance with one embodiment, there is a system **1000** having at least a processor **1090** and a memory **1095** therein to execute implementing logic or instructions **1085**. Such a system **1000** may communicatively interface with and cooperatively execute with the benefit of a hosted cloud computing environment, such as a cloud computing architecture or a cloud based services provider. For instance, information **1036** may be transacted upon or communicated within such a system **1000** and/or information **1037** communicated to or received from a cloud computing architecture. For example, audio and video streams and telemetry data may constitute information **1036** and **1037** communicated within such a system and to external systems, such as the cloud based service provider, from such a system **1000**.

According to the depicted embodiment, the system **1000** includes the processor **1090** and the memory **1095** to execute instructions at the system **1000**; a database **1055** to store a plurality of data and objects, such as captured audio and video data as well as telemetry data. Personal Area Network (PAN) interface **1035** connects the system **1000** with other electronic devices, such as a smartphone over Bluetooth or other communication means. Cellular transmit interface **1025** enables the system **1000** to communicate data with remote systems, such as a remote cloud based data repository. Configuration **1056** is depicted to store the various configurations utilized by system **1000** within DB records **1057** along side other information such as the captured audio and video and telemetry data. Triggers **1097** may be defined and stored by the database **1055**. Triggers may additionally be passed between a smartphone and the system via, for instance, PAN interface **1035**. The sensor assembly **1050** depicts a series of sensors for the system

1000 including, for instance, front camera 1051, rear camera 1052, audio capture 1041 device, GPS 1042 sensor, biometric 1043 sensor. Further utilized may be side cameras, depth sensors, etc.

Bus 1015 interfaces the various components of the system 1000 amongst each other, with any other peripheral(s) of the system 1000, and with external components such as external network elements, other machines, client devices, cloud computing services, etc. Communications may further include communicating with external devices via a network interface over a LAN, WAN, or the public Internet.

In accordance with a particular embodiment there is a personal safety device or system which includes, for example, a processor and a memory to execute instructions; a rechargeable battery to electrically power the personal safety device; a front facing video camera to capture video data of a scene anterior to a front face of the personal safety device; a rear facing video camera to capture video data of a scene posterior to a rear of the personal safety device; an audio capture device to capture audio data from an environment within which the personal safety device is to operate; a trigger to initiate recording of the front facing video camera, the rear facing video camera, and the audio capture device when triggered by an operator of the personal safety device; and a transceiver to transmit the recorded video data from the front and rear cameras and the captured audio data to a remote location over a network.

According to an alternative embodiment there is a public safety system for use by a law enforcement officer, the public safety system including: a gun holster; a gun placement sensor integrated with the gun holster, the gun placement sensor to determine whether a gun of the law enforcement officer is holstered or not holstered; a wireless transceiver integrated with the gun holster, the wireless transceiver to wirelessly communicate with a wearable body camera to be word by the law enforcement officer; the wearable body camera in wireless communication with the gun holster; front facing video camera integrated with the body camera to capture video data of a scene in front of the body camera; an audio capture device integrated with the body camera to capture audio data; in which the gun placement sensor of the holster to initiate recording of the front facing video camera and the audio capture device when the gun is determined to have been removed from the holster; and a cellular transceiver to transmit the recorded video data and the captured audio data to a remote location over a network.

According to one embodiment of the public safety system, the cellular transceiver to transmit the recorded video data and captured audio data to the remote location includes the cellular transceiver to transmit the recorded video data and captured audio data to a law enforcement agency via the remote location.

According to one embodiment of the public safety system, additional police resources are automatically requested for dispatch to a location of the law enforcement officer based on GPS data received with the transmission of the video data and audio data based on the gun being removed from the holster.

FIG. 11 illustrates a diagrammatic representation of a machine 1100 in the exemplary form of a computer system, in accordance with one embodiment, within which a set of instructions, for causing the machine/computer system 1100 to perform any one or more of the methodologies discussed herein, may be executed. In alternative embodiments, the machine may be connected (e.g., networked) to other machines in a Local Area Network (LAN), an intranet, an extranet, or the public Internet. The machine may operate in the capacity of a server or a client machine in a client-server network environment, as a peer machine in a peer-to-peer (or distributed) network environment, as a server or series of servers within an on-demand service environment. Certain embodiments of the machine may be in the form of a personal computer (PC), a tablet PC, a set-top box (STB), a Personal Digital Assistant (PDA), a cellular telephone, a web appliance, a server, a network router, switch or bridge, computing system, or any machine capable of executing a set of instructions (sequential or otherwise) that specify actions to be taken by that machine. Further, while only a single machine is illustrated, the term "machine" shall also be taken to include any collection of machines (e.g., computers) that individually or jointly execute a set (or multiple sets) of instructions to perform any one or more of the methodologies discussed herein.

The exemplary computer system 1100 includes a processor 1102, a main memory 1104 (e.g., read-only memory (ROM), flash memory, dynamic random access memory (DRAM) such as synchronous DRAM (SDRAM) or Rambus DRAM (RDRAM), etc., static memory such as flash memory, static random access memory (SRAM), volatile but high-data rate RAM, etc.), and a secondary memory 1118 (e.g., a persistent storage device including hard disk drives and a persistent database and local data store), which communicate with each other via a bus 1130. Main memory 1104 may include the databases when operating, cache, configuration information, etc. Main memory 1104 and its sub-elements are operable in conjunction with cameras 1123, sensors 1125, processing logic 1126, and processor 1102 to perform the methodologies discussed herein.

Processor 1102 represents one or more general-purpose processing devices such as a microprocessor, central processing unit, or the like. More particularly, the processor 1102 may be a complex instruction set computing (CISC) microprocessor, reduced instruction set computing (RISC) microprocessor, very long instruction word (VLIW) microprocessor, processor implementing other instruction sets, or processors implementing a combination of instruction sets. Processor 1102 may also be one or more special-purpose processing devices such as an application specific integrated circuit (ASIC), a field programmable gate array (FPGA), a digital signal processor (DSP), network processor, or the like. Processor 1102 is configured to execute the processing logic 1126 for performing the operations and functionality which is discussed herein.

The computer system 1100 may further include a network interface card 1108. The computer system 1100 also may include a user interface 1110 (such as a video display unit, a liquid crystal display, etc.), an alphanumeric input device 1112 (e.g., a keyboard), a cursor control device 1114 (e.g., a mouse), and a signal generation device 1116 (e.g., an integrated speaker). The computer system 1100 may further include peripheral device 1136 (e.g., wireless or wired communication devices, memory devices, storage devices, audio processing devices, video processing devices, etc.).

The secondary memory 1118 may include a non-transitory machine-readable storage medium or a non-transitory computer readable storage medium or a non-transitory machine-accessible storage medium 1131 on which is stored one or more sets of instructions (e.g., software 1122) embodying any one or more of the methodologies or functions described herein. The software 1122 may also reside, completely or at least partially, within the main memory 1104 and/or within the processor 1102 during execution thereof by the computer system 1100, the main memory 1104 and the processor 1102

also constituting machine-readable storage media. The software **1122** may further be transmitted or received over a network **1120** via the network interface card **1108**.

While the subject matter disclosed herein has been described by way of example and in terms of the specific embodiments, it is to be understood that the claimed embodiments are not limited to the explicitly enumerated embodiments disclosed. To the contrary, the disclosure is intended to cover various modifications and similar arrangements as are apparent to those skilled in the art. Therefore, the scope of the appended claims are to be accorded the broadest interpretation so as to encompass all such modifications and similar arrangements. It is to be understood that the above description is intended to be illustrative, and not restrictive. Many other embodiments will be apparent to those of skill in the art upon reading and understanding the above description. The scope of the disclosed subject matter is therefore to be determined in reference to the appended claims, along with the full scope of equivalents to which such claims are entitled.

What is claimed is:

1. A personal safety device embodied as a non-dischargeable video capture gun apparatus having a gun shape defined by at least a gun grip, one or more gun barrels, and gun trigger and comprising: a processor and a memory to execute instructions; a rechargeable battery to electrically power the personal safety device; a front facing video camera to capture video data of a scene anterior to a front face of the personal safety device; a rear facing video camera to capture video data of a scene posterior to a rear of the personal safety device; an audio capture device to capture audio data from an environment within which the personal safety device is to operate; a trigger to initiate recording of the front facing video camera, the rear facing video camera, and the audio capture device when triggered by an operator of the personal safety device, wherein the personal safety device does not fire ammunition, wherein the trigger comprises one of a gun trigger; a mechanical trigger; a push button; a pressure sensitive trigger; and wherein the trigger to initiate different events based on a distance an operator of the personal safety device pulls the trigger; and a transceiver to transmit the recorded video data from the front and rear cameras and the captured audio data to a remote location over a network.

2. The personal safety device of claim **1**, further comprising:

a GPS sensor;

a time module;

a cache within the memory of the personal safety device; and

wherein the trigger when triggered by the operator of the personal safety device causes the memory to receive GPS data from the GPS sensor, to receive a time stamp from the time module, and to receive the video data from the front and rear cameras and the audio data from the audio capture device.

3. The personal safety device of claim **2**, further comprising:

a data store;

wherein the trigger when triggered by the operator of the personal safety device causes the cache of the memory to persistently store the cached video data from the front and rear cameras and the audio data from the audio capture device in the data store and to transmit the cached video data from the front and rear cameras and the audio data from the audio capture device to the remote location over the network.

4. The personal safety device of claim **1**, wherein the transceiver to transmit the recorded video data from the front and rear cameras and the captured audio data to a remote location over a network comprises the transceiver to transmit the recorded video data from the front and rear cameras and the captured audio data as a live data stream from the memory of the personal safety device to a cloud computing repository over a public Internet via one of: a 3G cellular wireless connection; a 4G cellular wireless connection; an LTE cellular wireless connection; a GSM cellular wireless connection; a CDMA cellular wireless connection or via a WiFi wireless connection.

5. The personal safety device of claim **1**, wherein the trigger to initiate recording of the front facing video camera, the rear facing video camera, and the audio capture device when triggered by an operator of the personal safety device comprises:

a mechanical gun trigger to be triggered by the operator via an affirmative physical action of the operator of the personal safety device.

6. The personal safety device of claim **1**, wherein the trigger to initiate different actions comprises the trigger to initiate one the following three events based on the distance the operator pulls the trigger based on the pressure exerted upon the trigger by the operator:

(i) the trigger to initiate a record mode event when the operator pulls the trigger a first distance or with a first pressure, wherein the record mode is to record and store locally the video data from the front and rear cameras and the audio data from the audio capture device and to transmit the recorded video data and audio data to a cloud based repository for personal use without relaying the transmitted video data and audio data from the cloud based repository to any public safety or law enforcement entity;

(ii) the trigger to initiate an alert mode event when the operator pulls the trigger a second distance greater than the first distance or with a second pressure greater than the first pressure, wherein the alert mode is to record and store locally the video data from the front and rear cameras and the audio data from the audio capture device and to transmit the recorded video data and audio data to the cloud based repository with an alert to communicate the transmitted video data and audio data from the cloud based repository to a public safety or law enforcement entity;

(iii) the trigger to initiate a panic mode event when the operator pulls the trigger a third distance greater than the first and second distances or with a third pressure greater than the first and second pressures, wherein the panic mode is to record and store locally the video data from the front and rear cameras and the audio data from the audio capture device and to transmit the recorded video data and audio data to the cloud based repository with an alert to communicate the transmitted video data and audio data from the cloud based repository to a public safety or law enforcement entity and with a criticality flag requesting urgent dispatch of police to the location of the personal safety device.

7. The personal safety device of claim **1**:

wherein the trigger further causes the personal safety device to initiate capture of GPS location information, time stamp information, operator identity information, personal safety device identity information, and a criticality level based on the degree of trigger pull by the operator of the personal safety device; and

wherein the transceiver to transmit the recorded video data from the front and rear cameras and the captured audio data to the remote location over a network comprises the transceiver to live stream the video data and the audio data to the remote location with the GPS location information, the time stamp information, the operator identity information, the personal safety device identity information; and a criticality flag based on the criticality level.

8. The personal safety device of claim **1**:

wherein the remote location comprises a cloud computing architecture providing cloud based services;

wherein the cloud computing architecture initiates different events based upon the criticality flag received with the streamed video data and the audio data and telemetry data transmitted concurrently therewith;

wherein the cloud computing architecture triggers a request for police dispatch to a GPS location indicated via the telemetry data received based on a criticality flag received indicating a criticality of an event at the GPS location based on an affirmative action of the operator of the personal safety device.

9. The personal safety device of claim **1**:

wherein the remote location comprises a cloud computing architecture providing cloud based services;

wherein the cloud computing architecture initiates different events based upon the streamed video data and the audio data and telemetry data transmitted with the audio and video data stream;

wherein the cloud computing architecture initiates one or more of the following events:

receives and archives the streamed video data and the audio data and telemetry data transmitted;

receives and relays the streamed video data and the audio data and telemetry data transmitted to a law enforcement entity;

requests non-urgent police dispatch on behalf of the operator of the personal safety device;

requests urgent police dispatch on behalf of the operator of the personal safety device;

requests police dispatch without human intervention based on the streamed video data and the audio data and telemetry data transmitted; and

requests police dispatch subsequent to human intervention and review of the streamed video data and the audio data and telemetry data transmitted.

10. The personal safety device of claim **1**:

wherein the remote location comprises a cloud computing architecture providing cloud based services; and

wherein the cloud computing architecture analyzes the streamed video data transmitted to identify, without human intervention, a weapon within the video data captured by the front facing camera; and

wherein the cloud computing architecture requests urgent police dispatch on behalf of the operator of the personal safety device upon identification of the weapon.

11. The personal safety device of claim **1**:

wherein the trigger further causes the personal safety device to initiate capture information based on the degree of trigger pull by the operator of the personal safety device, and

wherein the transceiver is to transmit the recorded video data from the front and rear cameras and the captured audio data to the remote location over the network, the recorded video data and captured audio data including live stream video data and audio data with the information.

12. The personal safety device of claim **1**:

wherein the front facing video camera is to capture video data of a target at which the personal safety device is pointed;

wherein the rear facing video camera is to capture video data of an operator holding the personal safety device.

13. The personal safety device of claim **1**, further comprising:

one or more side facing cameras to capture video data of a scene to a lateral left or lateral right of the personal safety device.

14. A public safety system for use by a law enforcement officer, the public safety system comprising: a gun holster with a trigger; a gun placement sensor integrated with the gun holster, the gun placement sensor to determine whether a gun of the law enforcement officer is holstered or not holstered; a wireless transceiver integrated with the gun holster, the wireless transceiver to wirelessly communicate with a wearable body camera to be word by the law enforcement officer; the wearable body camera in wireless communication with the gun holster; front facing video camera integrated with the body camera to capture video data of a scene in front of the body camera; an audio capture device integrated with the body camera to capture audio data; wherein the gun placement sensor of the holster to initiate recording of the front facing video camera and the audio capture device when the gun is determined to have been removed from the holster; wherein the trigger is to initiate recording of the front facing video camera, a rear facing video camera, and the audio capture device when triggered by an operator of the personal safety system, wherein the personal safety system does not fire ammunition, wherein the trigger comprises one of: a gun trigger; a mechanical trigger; a push button; a pressure sensitive trigger; and wherein the trigger to initiate different events based on a distance an operator of the personal safety system pulls the trigger; and a cellular transceiver to transmit the recorded video data and the captured audio data to a remote location over a network.

15. The public safety system of claim **14**, wherein the cellular transceiver to transmit the recorded video data and captured audio data to the remote location comprises the cellular transceiver to transmit the recorded video data and captured audio data to a law enforcement agency via the remote location.

16. The public safety system of claim **14**, wherein additional police resources are automatically requested for dispatch to a location of the law enforcement officer based on GPS data received with the transmission of the video data and audio data based on the gun being removed from the holster.

17. A method performed by a personal safety device having at least a processor and a memory therein, wherein the method comprises: receiving a trigger event from a trigger of the personal safety device, the personal safety device embodying a non-dischargeable video capture gun apparatus that doesn't shoot ammunition and has a gun shape defined by at least a gun grip, one or more gun barrels, and gun trigger, wherein the personal safety device does not fire ammunition, wherein the trigger comprises one of: a gun trigger; a mechanical trigger; a push button; a pressure sensitive trigger; initiating different events, in response to the trigger event from the trigger, based on a distance an operator of the personal safety device pulls the trigger; initiating recording video data via a front facing video camera of the personal safety device responsive to the trigger event, the front facing video camera to capture video

data of a scene anterior to a front face of the personal safety device; initiating recording video via a rear facing video camera of the personal safety device responsive to the trigger event, the rear facing video camera to capture video data of a scene posterior to a rear of the personal safety device; initiating audio capture of audio from an environment within which the personal safety device is operating responsive to the trigger event; caching the recorded video data and audio data in the memory of the personal safety device; and transmitting, via a wireless transmitter, the cached video data and audio data as a stream to a remote location over a network.

18. The method of claim **17**, wherein the personal safety device further comprises:

a GPS sensor;

a time module;

a cache within the memory of the personal safety device;

wherein the trigger event is operator input indicating a trigger pull by an operator of the personal safety device, the trigger pull causing the memory to receive GPS data from the GPS sensor, to receive a time stamp from the time module, and to receive the video data from the front and rear cameras and the audio data from the audio capture device; and

wherein the method further comprises storing, via a data store of the personal safety device, the cached video data from the front and rear cameras and the audio data from the audio capture device.

19. Non-transitory computer readable storage media having instructions stored thereon that, when executed by a processor of a personal safety device, the instructions cause the personal safety device to perform operations including: receiving a trigger event from a trigger of the personal safety device, the personal safety device embodying a non-dischargeable video capture gun apparatus that doesn't shoot ammunition and has a gun shape defined by at least a gun grip, one or more gun barrels, and gun trigger, wherein the personal safety device does not fire ammunition, wherein the trigger comprises one of: a gun trigger; a mechanical trigger; a push button; a pressure sensitive trigger; initiating different events, in response to the trigger event from the trigger, based on a distance an operator of the personal safety device pulls the trigger; initiating recording video data via a front facing video camera of the personal safety device responsive to the trigger event, the front facing video camera to capture video data of a scene anterior to a front face of the personal safety device; initiating recording video via a rear facing video camera of the personal safety device responsive to the trigger event, the rear facing video camera to capture video data of a scene posterior to a rear of the personal safety device; initiating audio capture of audio from an environment within which the personal safety device is operating responsive to the trigger event; caching the recorded video data and audio data in the memory of the personal safety device; and transmitting, via a wireless transmitter, the cached video data and audio data as a stream to a remote location over a network.

20. The non-transitory computer readable storage media of claim **19**, wherein the personal safety device further includes:

a GPS sensor;

a time module;

a cache within the memory of the personal safety device;

wherein the trigger event is operator input indicating a trigger pull by an operator of the personal safety device, the trigger pull causing the memory to receive GPS data from the GPS sensor, to receive a time stamp from the time module, and to receive the video data from the front and rear cameras and the audio data from the audio capture device; and

wherein the instructions cause the personal safety device to perform operations further including: storing, via a data store of the personal safety device, the cached video data from the front and rear cameras and the audio data from the audio capture device.

* * * * *